AMATEUR RADIO

AUGUST 1964

Vol. 32, No. 8

Active YL Amateurs in the Sydney area—
Left to right: Muriel VK2AIA, Mona VK2AXS, Hebe VK2AOK, and Verle VK2MR.

2/-

Registered at G.P.O., Melbourne, for transmission by post as a periodical

NEW VALVES AT BARGAIN PRICES

1A3 2/6 10 a £1
1A5 5/- 5 a £1
1C7 3/- 7 a £1
1D8 7/6 3 a £1
1F5 10/-
1H5 7/6 3 a £1
1H6 5/- 5 a £1
1K4 5/- 5 a £1
1K5 5/- 5 a £1
1K7 5/- 5 a £1
1L4 5/- 5 a £1
1L5 10/-
1LN5 (CV781) 5/- 5 a £1
1M5 5/- 5 a £1
1P5 2/- 10 a £1
1Q5 5/- 5 a £1
1S2 18/-
1S5 16/-
1T4 10/-
2A5 7/6 3 a £1
2A6 7/6 3 a £1
2C42 15/-
2C46 15/-
2D21 12/-
2X2 5/- 5 a £1
3A5 10/-
3S4 10/-
5R4GY 20/-
5U4GB 14/6
5V4G 17/6
5Y3GT 13/9
6A6 7/6 3 a £1
6AB7 10/-
6AC7 7/6 3 a £1
6AG5 5/- 5 a £1
6AG7 12/6
6AJ5 7/6 3 a £1
6AK5 15/-
6AL5 14/-
6AM5 15/-
6AM6 (EF91) 10/-
6AS7GT 20/-
6B6 7/6 3 a £1
6B3 metal 17/6
6BE6 15/-
6BQ5 17/-
6C4 5/- 5 a £1
6C6 5/- 5 a £1
6C8 10/-
6CM5 25/-
6CW4 25/-
6F8 5/- 5 a £1
6G6G 7/6 3 a £1
6G8G 26/-
6H6 Metal 3/6
6J5GT 10/-
6J6 10/-
6K7 5/- 5 a £1
6K8GT 12/6
6L6GT 15/-
6L7 5/- 5 a £1
6N7 5/- 5 a £1
6R7 7/6 3 a £1
6SC7 7/6 3 a £1
6SF5 7/6 3 a £1
6SF7 7/6 3 a £1
6SH7 4/- 6 a £1
6SJ7 12/6
6SK7GT 20/-
6SL7WGT 12/6
6SN7GT 10/-
6SQ7GT 22/-
6SS7 7/6 3 a £1
6U8 17/-
6V4 11/4
6V6GT 16/-
6X4 10/-
6X5 13/-
7A8 2/- 11 a £1
7C5 5/- 5 a £1
7C7 5/- 5 a £1
7E6 3/6 7 a £1
7W7 2/6 10 a £1
12A6 3/- 7 a £1
12AH7 5/- 5 a £1
12AT7 15/-
12AU7 15/-
12AV6 7/6 3 a £1
12BE6 7/6 3 a £1
12C8 5/- 5 a £1
12H6 3/6 7 a £1
12J5 5/- 5 a £1
12SA7GT 10/-
12SC7 5/- 5 a £1
12SK7 5/- 5 a £1
12SQ7 5/- 5 a £1
12SR7 5/- 5 a £1
19 5/- 5 a £1
30 5/- 5 a £1
47 5/- 5 a £1
57 5/- 5 a £1
58 5/- 5 a £1
717A 7/6 3 a £1
725A 20/-
808 10/-
809 20/-
829B £3
830B 15/-
866 35/-
954 5/- 5 a £1
955 5/- 5 a £1
956 5/- 5 a £1
958A 2/6 10 a £1
1616 20/-
1625 5/- 5 a £1
1626 5/- 5 a £1
1629 5/- 5 a £1
2051 5/- 5 a £1
5763 28/-
6021 10/-
9002 10/-
9004 5/- 5 a £1
AV11 2/11 8 a £1
EA50 2/- 11 a £1
ECC35 20/-
ECH33 20/-
ECH35 7/6
EF39 5/- 5a £1
EF50 (VR91) and socket 3/6
EF70 5/- 5 a £1
EF72 5/- 5 a £1
EF73 5/- 5 a £1
EF86 26/-
EL41 10/-
EY91 5/- 5 a £1
QQE04/20 £3½
QQV06/40 97/6
UL41 7/6 3 a £1
VR53 5/- 5 a £1
VR100 (6U7) 7/6
VR102 5/- 5 a £1
VR103 5/- 5 a £1
VR136 2/- 12 a £1
VR137 2/6 10 a £1
VT78 (6D6) 5/-
VT127 5/- 5 a £1
VT501 7/6 3 a £1

Packing and Postage 5d. per Valve.

METERS

M065 0-1 mA., 3¼ in. rnd., bakelite case, 35/-
M065 0-50 mA. d.c., 3¼ in. rnd., bakelite, 37/6
M065 0-150 mA. d.c., 3¼ in. rnd., bakelite, 37/6
M065 0-250 mA. d.c., 3¼ in. rnd., bakelite, 37/6
M065 0-500 mA. d.c., 3¼ in. rnd., bakelite, 37/6
MR1P 0-1 mA., 1¼ in. square face, 1 in. round hole, clear plastic case 32/6
MR2P 1¾ in. square face, 1½ in. round hole, clear plastic case:—
MR2P 50 uA. 47/6
MR2P 500 uA. 37/6
MR2P 1 mA. 35/-
MR2P 50 mA. 35/-
MR2P "VU" Meter 45/-
MR2P "S" Meter (reads S1 to 9 plus 10 to 30 db. F.S.D. 1 mA.) 45/-
HCR62 edgewise "S" Meter £4/10/0
MR3P 3 x 3 in. square face, 2¾ in. round hole, clear plastic case:—
MR3P 1 mA. 47/6
MR3P "VU" Meter £3/17/6
MR52 2¼ in. square face, 2 in. round hole, black bakelite case:—
MR52 100 uA. 63/-
MR52 1 mA. 40/-
MR65 3¼ in. square face, 2½ in. round hole, black bakelite case:—
MR65 1 mA. 47/6
MR65 "VU" Meter £4/2/6
SO45 1¾ in. round face, 1¾ in. round hole, black bakelite case:—
SO45 20 Volt A.C. 35/-
SO45 30 Volt A.C. 35/-
G.E.C. Meters, 3¼ in. round face, 2½ hole, black metal case, 0-50 mA. 25/-

Packing and Postage 2/6

ALUMINIUM CHASSIS

5 x 3 x 2 inch 6/3
6 x 4 x 2 inch 7/-
8 x 5 x 2½ inch 10/6
10 x 6 x 2½ inch 12/9
13 x 7 x 2½ inch 12/9

Also Large Stock of Matrix Boards and Accessories.

Packing and Postage 2/6

NEW TRANSISTORS IN STOCK

OC45 .... 14/-
OC71 .... 10/-
OC74 .... 11/-
OC170 .... 17/6
OC171 .... 17/6
OC45 .... 14/-

Packing and Postage 1/-

NEW SPEAKERS

20C—2 inch, 15 ohms 35/-
2C—2 inch, 15 ohms 35/-
3C—3 inch, 3.5/15 ohms 35/-
4C—4 inch, 3.5/15 ohms 35/-
5C—5 inch, 3.5/15 ohms 35/-
55-4C—5 x 4 inch, 3.5/15 ohms 39/-
6H—6 inch, 3.5/15 ohms 47/6
75H—7 x 5 inch, 3.5/15 ohms 47/6
8H—8 inch, 3.5/15 ohms 57/6
8MX—8 inch, 15 ohms 82/6
96H—9 x 6 inch, 3.5/15 ohms 57/6
12M—12 inch, 2/15 ohms 87/6
12MX—12 inch, 15 ohms £5/7/6

Packing and Postage 2/-

VERNIER DIALS

Ratio 8 to 1 reduction, scaled 0-10.
Type T501, 1½" diam. .... 17/6 inc. tax
Type T502, 2" diam. .... 22/- ,, ,,
Type T503, 3" diam. .... 28/- ,, ,,

Packing and Postage 11d.

CRYSTAL SETS

EASTERN Germanium Radios, complete with earphone and instructions:—
Model ER22 .... 22/6
Model ER57 .... 22/6
Model ER87, de luxe, built-in compass 25/-
Crystal earphones with plug 6/6
High Impedance Headphones, "Q" Plus 27/6
Rienartz Coil, "Q" plus 12/6
Egg insulators .... 9d. each

Packing and Postage 2/-

RECORDING TAPE

Well known make, to clear, brand new

150 Ft. on 3 inch Reel, Acetate Base 8/-
200 Ft. on 3 inch Reel, Acetate Base 10/-
300 Ft. on 3 inch Reel, Mylar Base 12/6
600 Ft. on 3¾ inch Reel, Polyester Base 25/-
900 Ft. on 5 inch Reel, Acetate Base 19/6
1200 Ft. on 5¾ inch Reel, Acetate Base .. 32/6
1200 Ft. on 7 inch Reel, Acetate Base 32/6
1200 Ft. on 7 inch Reel, Mylar Base 35/-
1800 Ft. on 7 inch Reel, Acetate Base 42/6
1800 Ft. on 7 inch Reel, Mylar Base 45/-
2400 Ft. on 7 inch Reel, Mylar Base 52/6

ALSO EMPTY TAPE REELS
3 inch 2/-; 5 inch 3/6; 7 inch 5/-.
OR IN PLASTIC STORAGE CASE
5 inch size 8/-; 7 inch size 12/-.
Packing and Postage 2/6

LOG BOOKS 5/6 each, postage 1/-

CO-AXIAL CABLE

50 ohm, UR67, 3/8" diam., in 25 yd. Rolls **25/-**; or 1/6 yard.
50 ohm, 3/16" diam., **2/6 yard**, any length up to 200 yards.
72 ohm UR70, 3/16" diam., in 27 yd. Rolls **30/-**; or 1/6 yard.
72 ohm, 3/16", 35 feet **10/-**.

Packing and Postage 7/6

MULTIMETER Model 200H

20,000 ohms per v. d.c. 10,000 ohms per v. a.c.

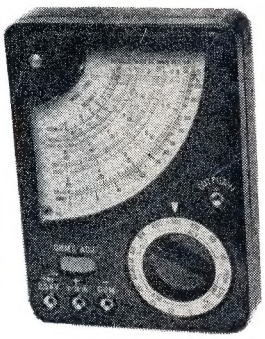

Specifications:
D.c. volts: 0-5, 25, 50, 250, 500, 2,500.
A.c. volts: 0-10, 50, 100, 500, 1,000.
D.c. current: 0-50 μA.; 25, 250 mA.
Resistance: 0-60K ohms; 0-6 meg.
Capacity: 0.01-0.3 μF. (at a.c. 5v.); 0.0001 - 0.01 μF. (at a.c. 250v.).
Decibel: minus 20 db. plus 22 db.
Output range 0-10, 50, 100, 500, and 1,000.
Battery used: UM3 1.5v. 1 piece.
Dimensions: 3¼ x 4½ x 1-1/8 in.

Complete with internal battery, testing leads and prods.

Price £5/12/6 inc. tax.
Packing and Postage 3/6

VARIABLE CONDENSERS

Roblan, 10-415 pF., one-gang 25/-
Roblan, 10-415 pF., two-gang 32/-
Roblan, 10-415 pF., three-gang 40/-
10 to 365 pF. Ideal for Crystal Set. **10/- each.**

Packing and Postage 2/-

SLUG-TUNED FORMERS

3/16 inch diameter .... **1/6 each**

HAM RADIO SUPPLIERS

5A MELVILLE STREET, HAWTHORN, VICTORIA Phone 86-6465

North Balwyn tram passes corner. **Money Orders and Postal Notes payable North Hawthorn P.O.**

We sell and recommend Leader Test Equipment, Pioneer Stereo Equipment and Speakers, Hitachi Radio Valves and Transistor Radios, Kew Brand Meters, A. & R. Transformers and Transistor Power Supplies, Ducon Condensers, Welwyn Resistors, etc.

"AMATEUR RADIO"

JOURNAL OF THE WIRELESS INSTITUTE OF AUSTRALIA. FOUNDED 1910.

AUGUST 1964
Vol. 32, No. 8

Editor:
K. M. COCKING VK3ZFQ

Publications Committee:
G. W. Baty (Secretary) VK3AOM
A. W. Chandler (Circulation) VK3LC
S. T. Clark VK3ASC
R. S. Fisher VK3OM
R. W. Higginbotham VK3RN
E. C. Manifold VK3EM
K. E. Pincott VK3AFJ

Advertising Enquiries:
C/o. P.O. Box 36, East Melbourne, C.2, Vic.
OR
Mrs. BELLAIRS, Phone 41-3535. 478 Victoria Parade, East Melbourne, C.2, Victoria. Hours 10 a.m. to 3 p.m. only.

Publishers:
VICTORIAN DIVISION W.I.A.,
Reg. Office: 65a Franklin St., Melbourne, Vic.

Printers:
"RICHMOND CHRONICLE," Phone 42-2419. Shakespeare Street, Richmond, E.1, Vic.

★

All matters pertaining to "A.R.," other than subscriptions, should be addressed to:

THE EDITOR,
"AMATEUR RADIO,"
P.O. BOX 36,
EAST MELBOURNE, C.2, VIC.

Acknowledgments will be sent following the Committee meeting on the second Monday of each month. All Sub-Editors should forward their articles to reach "A.R." before the 8th of each month. Any item received after the Committee meeting will be held over until the next month. Publication of any item is dependent upon space availability, but in general about two months may elapse before a technical article is published after consideration by the Publications Committee.

★

Members of the W.I.A. should refer all enquiries regarding delivery of "A.R." direct to their Divisional Secretary and not to "A.R." direct. Non members of the W.I.A. should write to the Victorian Division, C/o P.O. Box 36, East Melbourne. Two months' notice is required before a change of mailing address can be effected. Readers should note that any change in the address of their transmitting station must, by P.M.G. regulation, be notified to the P.M.G. in the State of residence, in addition "A.R." should also be notified. A convenient form is provided in the "Call Book".

★

Direct subscription rate is 24/- a year, post paid, in advance. Issued monthly on the first of the month, January edition excepted.

★

OUR COVER

First YL meeting in Australia, comprising some of the active YL operators in the Sydney area.

FEDERAL COMMENT

★

CONTEST TIME

As the month of August comes round once more, the thoughts of many Amateurs turn to Contests in general, but the annual Remembrance Day Contest in particular. Although August is still winter, its arrival indicates that spring is near and with it a general improvement in conditions on the Amateur bands—time to turn off the t.v., leave the fireside and "stoke" up the rig again.

This year is the seventeenth year the Contest has been held, and probably many of our younger generation of Amateurs were babes when the inaugural Contest was held in 1948. It is, therefore, conceivable that to them the origin and spirit behind the Contest would have been meaningless had it not been for the opening "on-the-air" ceremony and speeches by prominent Australians.

This Contest, because of its publicity, ceremony and perpetuity, has continued to maintain its popularity with youngsters and oldsters alike. It is this spirit of rivalry and participation that inspired the rules in 1948. It is most gratifying to the Executive that States continue to vie for that Perpetual Trophy which is the crowning achievement of their success.

In entering the Contest this year, you, as a participant, must assist your State by taking a little time after the Contest to mail your log—a little effort, but one that may help your State to win. Carry that sense of competition beyond the end of the Contest—the culmination of your Contest effort is the support of your State.

I.T.U. FUND

At the Sydney Convention in 1962, all Federal Councillors agreed that action should be taken at once to raise funds for the next I.T.U. Conference. The motion carried at that time has since been ratified by all Divisions, and in some Divisions, contributions have already been made.

Although this procedure is different from that used prior to the 1959 I.T.U. Conference, the need is the same. In this instance, an allocation by States has been determined, based on membership. This quota system has been used of recent years in other spheres and has proved to be very successful. We know its present application in Amateur circles will be equally well received by the membership.

Divisions should now become increasingly active in their efforts to meet their quotas, as time has an unpleasant habit of slipping quietly away. August has already been said to be competition month—let us continue this competition feeling into the I.T.U. Fund. The early filling of the Division's quota before another Division will result in an overwhelming feeling of satisfaction for a job well done.

The date of the next I.T.U. has not as yet been set, but it could be as early as 1965. It is, therefore, in the interests of the W.I.A. as a whole that subscriptions "roll in" with increasing impetus. To increase this momentum, quotas and subscriptions received will be published monthly in this journal to promote and instill that competitive spirit.

FEDERAL EXECUTIVE, W.I.A.

CONTENTS

Modifications to Convert the Courier FM100 Transceiver from 162 Mc. to 146 Mc. 3
Getting Started on 160 Metres, Part One—Transmitter 5
A Capacity Meter 5
Tuning Indicator for Small Transmitters 6
A Modern DX Receiver 9
Your Pye Reporter PTCA-116, Mk. II., Part Two—The Transmitter 15
VK-ZL-Oceania DX Contest, 1964 7
1963 "CQ" Contest Results 7
VU2/4S7 DX Contest 1964 18
Television Interference Traced to Repair Trucks 6
Publications Committee Reports .. 6
New Call Signs 19
Some Transistors Carry 600% Duty 18
Johannesburg Festival Award 18
Correspondence 16
DX 17
Federal and Divisional Monthly News Reports 21
SWL 16
VHF 19
Youth Radio Clubs 18

MULLARD PREFERRED RANGE OF TRANSISTORS

For Entertainment Applications in Australia

When approaching the maximum limiting values, either electrically or thermally, the comprehensive data and curves, as contained in Volume 4 of the Mullard Technical Handbook, should be consulted.

Type Number	Description and Application	$-V_{CB}$ max (V)	$-V_{CE}$ max (V)	$-V_{EB}$ max (V)	$-I_C$ max (mA)	$-I_B$ max (mA)	T_j max (°C)	P_{tot} max T_{amb} 25°C (mW)	Outlines and Dimensions
AC125	General purpose audio pre-amplifier and driver of the p-n-p alloy junction type	32	32	10	200	10	90 ■	500 ●	TO-1
AC126	High gain audio pre-amplifier and driver of the p-n-p alloy junction type	32	32	10	200	10	90 ■	500 ●	TO-1
AC127	**n-p-n** germanium alloy junction transistor for use in complementary Class 'B' output stages	+32	+32	+10	500	10	100 ■	280 ●	TO-1
AC128 2-AC128	High gain germanium alloy junction transistor of the p-n-p type designed for use in Class 'B' output stages	32	32	10	1A	20	90 ■	550 ●	TO-1
AC132	Germanium alloy junction transistor of the p-n-p type for use in complementary Class 'B' output stages	32	32	10	200	10	90 ■	550 ●	TO-1
AC172	**n-p-n** low noise junction transistor of the germanium alloy type intended for use as audio pre-amplifier	+32	+32	+10	10★	10	100 ■	280 ●	TO-1
AD139 2-AD139	Medium power junction transistor of the p-n-p germanium alloy type for use in audio output stages	32	32	10	2A	200	90 ■	13 W ●	MD-11
AD140 2-AD140	Power junction transistor of the p-n-p germanium alloy type for use in audio output stages	55	55	10	3A	500	100 ■	35 W ●	TO-3
AF114N	Germanium transistor of the p-n-p alloy diffused type designed for use up to 100Mc/s	32	32	—	10	1	75	50 ▼	TO-44
AF115N	Germanium transistor of the p-n-p alloy diffused type designed for use up to 100Mc/s as mixer/oscillator and for use as RF amplifier up to 27Mc/s	32	32	—	10	1	75	50 ▼	TO-44
AF116N	Germanium transistor of the p-n-p alloy diffused type designed for use as mixer/oscillator and RF amplifier up to 16Mc/s	32	32	—	10	1	75	50 ▼	TO-44
AF117N	Germanium transistor of the p-n-p alloy diffused type designed for use as mixer/oscillator and RF amplifier up to 6Mc/s	32	32	—	10	1	75	50 ▼	TO-44
OC26 2-OC26	Power junction transistor of the p-n-p germanium alloy type intended for use in audio output stages	32	32	10	3·5A	500	100 ■	12·5W ●	TO-3
OC44N	Low noise junction transistor of the p-n-p germanium alloy type for use in early stages of audio amplifiers and as mixer/oscillator in broadcast receivers	15	15	12	10	1	90 ■	43 ▼	TO-1
OC45N	Low noise junction transistor of the p-n-p germanium alloy type intended for use in early stages of audio amplifiers and in IF stages in broadcast receivers	15	15	12	10	1	90 ■	43 ▼	TO-1
OC74N 2-OC74N	High gain germanium alloy junction transistor of the p-n-p type designed for use in Class 'B' output stages	20	20	6	300	—	90 ■	550 ●	TO-1

▼ T_{amb} = 45°C ● with suitable heat sink ■ 200 hours operation ★ Typical

Mullard

Mullard-Australia Pty. Ltd.

35-43 CLARENCE STREET, SYDNEY, N.S.W., 29 2006. 123 VICTORIA PARADE, COLLINGWOOD, N.5, VIC., 41 6644.

Associated with MULLARD LIMITED, LONDON

M 140A

Modifications to Convert the

COURIER FM100 TRANSCEIVER

from 162 Mc. to 146 Mc.

LINDSAY DOUGLAS, VK2ON*

THIS is a frequency-modulated set of about 8 watts r.f. output, first produced in 1954. It is self contained with vibrator power supply and may be operated on 6v. or 12v. with slight alteration. A separate a.c. supply may be fed in through the 6-pin large Jones socket if the wiring is changed slightly.

1. **Ventilation:** Some sets have good openings in top and back walls of case. The writer's model needed a hole 4½" x 8" cut in top, and another 1½" x 6" in centre of back wall, then filled in with wire gauze.

2. **Circuit**: Study carefully and learn the basic outlines of same. Circuits are available from W.I.A. N.S.W. Division, Box 1734, G.P.O., Sydney.

3. **Labelling**: Apart from the front panel, the components are unlabelled. To facilitate the various lining-up procedures the different items should be labelled, at least under the chassis. Typed labels were stuck on with resin glue after careful identification, e.g.—

V1—12AT7 mic. amp.
L7—9 meg.
T5—2.1 meg. (grid windings are on top).

This procedure takes an hour or two and is well worth while.

4. **Re-wire Heaters for 12v.** (if necessary) as follows:—

Fig.1.-Seven resistor strip behind front panel.

Remove earthing from A and C.
Transfer wire on B to A.
Transfer wire on D to C.

If necessary connect 25 ohm balancing resistor across A-B to equalise legs of heater chain.

5. **Re-wire Relay for 12v. and a.c.-d.c. Operation**: On 6v. the relay coils are in parallel—re-wire in series.

Insert OA210 or similar rectifier between yellow (front) wire and relay coil in correct polarity. Connect 25 μF. (or larger) 25v. working electrolytic between relay coil and chassis. It may have to be placed above the deck. This modification gave 5v. across relay, which was just sufficient to operate it.

6. **Alter Vibrator Transformer Connections for 12v.** (if applicable):

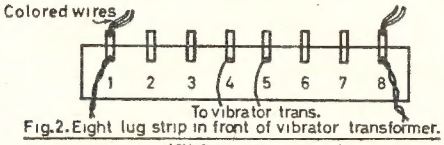

Fig.2.Eight lug strip in front of vibrator transformer.
(6V Connection shown)

Disconnect two coloured wires from 1 and transfer these to 4.

Disconnect two coloured wires from 8 and transfer these to 5.

Bridge lugs 4 and 5 with a short length of wire. The vibrator coil is connected across one 6v. leg of heater chain and causes little unbalance as it uses only 0.15 amp.

7. **Change co-ax output socket.**

8. **Instal R.f. Metering Circuit** to facilitate tuning-up of p.a. This gives tx output on meter position 2 on transmit, and rx "S" meter indication on receive.

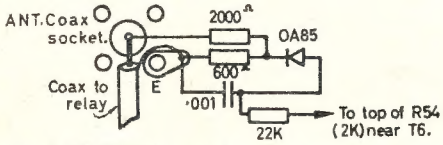

Fig.3. R.F. Metering circuit.

9. **Re-arrangement of Jones Socket** to allow operation on battery or a.c. Disconnect thin coloured wire from 1, 2, 3, 4 and insulate same.

Connect external 240v. a.c. supply to a Jones **plug** as follows:—

1. B Neg. (floating).
2. B+ 300v.
4. B+ 200v.
5. Earth and Heater.
6. Heater 12v. a.c.

On a.c. supply, the vibrator is removed from socket.

Complete internal wiring of Jones **socket** as follows:—

1. To top end of 100 ohm 5 watt resistor at back of chassis, R79 (back bias).
2. To pin No. 7 of 6X4, 300v. rectifier (K).
4. To electrolytic No. 3 (nearest back).

For mobile (battery) operation connect power via another Jones **plug** as follows:—

5. Neg. to car chassis (if polarity is correct).
6. +12v. to car battery via 20 amp. fuse in lead.

10. **Align Receiver Coils** as follows:—

(a) Fit new coils for L1 and L2, using an extra turn.
(b) Remove C35 across L1.
(c) Adjust slugs of T1 and T2 to first i.f. (12.7 megs.) with g.d.o., after softening wax with the tip of an instrument-type soldering iron.
(d) Solder four inches of hook-up wire to hot end of each winding in turn —bring g.d.o. close and drape wire around g.d.o. coil. Tune appropriate slug for a dip, with g.d.o. on correct frequency. Top slug tunes grid or secondary winding. These windings may need 10 pF. additional capacity.
(e) Later, if necessary, adjust T3, T4, T5 and T6 to 2.1 megs. by coupling g.d.o. to plate of 6AN7 second mixer with a very small capacity, and tuning for max. indication on first limiter (50 microamp. meter plugged in 10X type socket on front panel, meter switch on position 2). When tuning top slug, a 5K resistor with 0.01 μF. blocking condenser must be connected from chassis to plate terminal. When tuning bottom slug this damping is connected to top of grid winding.
(f) Adjust discriminator transformer T7 on a received signal, primary for max. audio signal, secondary for best quality and least background noise.
(g) Oscillator chain: A 14.81 meg. harmonic crystal is used and L5 adjusted for max. reading on meter position 1. Check accuracy of crystal. The slug in L5 allows of some variation in frequency.
(h) L4 should be adjusted to 44.4 megs. and L3 to 133.3 megs. When receiver is working these slugs should be tuned for max. received signal.

11. **Align Transmitter Coils** as follows:—

Check C10. This should be 100 pF. Mine measured 70 pF., so I replaced it. Now align coils with the g.d.o. to the following frequencies.

Use the appropriate meter test position when touching up coils at a later stage with transmitter on.

Coil	Freq.	Test Position
L6	3 Mc.	5
L7	9 Mc.	6
L8 (2 sep. coils)	18 Mc.	7
L9	36 Mc.	8
L10	73 Mc.	9
T9 (2 coils)	146 Mc.	10
T10 (2 coils)	146 Mc.	11 or 2

Remember to soften wax with soldering iron before moving slugs. Some metal slugs will need replacing with iron ones in order to resonate at the new frequency.

12. **Crystals**: 3041.7 Kc. for **tx.**
14.81 megs for **rx.**

These may be obtained to 0.005% tolerance in various sizes for about £3 each from several sources. Small size (HC6/U or Style D) crystals will allow of channel switching later if desired. The transmitter frequency should be checked and adjusted to within 3 kc. by listening on a separate v.h.f. receiver and beating the 10th harmonic of a g.d.o. on 14.6 megs. with the 146 meg. frequency. At the same time the g.d.o. frequency is checked by heterodyning with a 100 kc. marker on another receiver at 14.6 megs. The concentric trimmer at the crystal socket

(Continued on Page 6)

* Masons Parade, Gosford, N.S.W.

JUST ARRIVED! NEW 1964 EDITIONS!

★ A.R.R.L.—Radio Amateur's Handbook

Price 51/6 and 2/6 Post.

The Standard Manual of Amateur Radio Communication

★ The Radio Transistor Handbook

by Stoner & Earnshaw **Price 63/6 and 1/9 Post.**

THIS UP-TO-DATE HANDBOOK COVERS A WIDE RANGE OF COMMUNICATION FOR BOTH AMATEUR RADIO & COMMERCIAL APPLICATIONS

Get your copies now from

McGILL'S AUTHORISED NEWSAGENCY

Established 1860
"The G.P.O. is opposite"

183-185 ELIZABETH STREET, MELBOURNE, C.1, VIC.
Phones: 60-1475--6-7

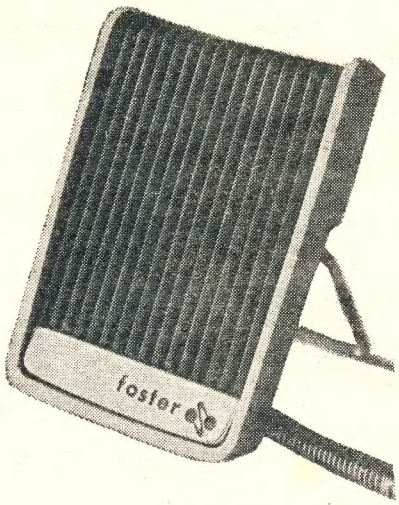

DF-2

FOSTER DYNAMIC MICROPHONES

FOR HAND-DESK USE

SPECIFICATIONS:

Output Impedance .... 50 ohms or 50K ohms
Effective output level .... —55 db. [0 db. = (one) 1V. Microbar]
Frequency response .... 200 to 10,000 c.p.s.

OMNI-DIRECTIONAL DYNAMIC:

SIZE: 3" x 2-1/8" x 1".
Cable: 12 ft. of P.V.C.
Switch: on-off.
Desk Stand. Clip folds for hand use.
Colour: WHITE.
Plastic Diaphragm.

Retail Price 50K ohms £2/10/7 + Sales Tax 5/3

A QUALITY PRODUCT OF EXCELLENT DESIGN

Marketed by **ZEPHYR PRODUCTS PTY. LTD.**

58 HIGH STREET, GLEN IRIS, S.E.6, VICTORIA Phones: 25-1300, 25-4556

ZEPHYR

Manufacturers of Radio and Electrical Equipment and Components

Agents: D. K. Northover & Co.; Neil Muller Ltd.; Homecrafts (Tas.) P/L.; Jacoby, Mitchell & Co. P/L.; T. H. Martin P/L.

GETTING STARTED ON 160 METRES

PART ONE

RODNEY D. CHAMPNESS, VK3UG*

THIS is the first of a two-part article dealing with quick and easy ways of getting started on 160 metres. In this part I will describe the transmitter I have built and am using on this band.

The transmitter has a two-stage r.f. section, consisting of a Pierce oscillator driving a pentode output stage. The modulator is also two-stage, with sufficient sensitivity for a crystal microphone to fully modulate the transmitter under close-speaking conditions.

This particular transmitter has been crystal controlled on 1825 kilocycles, which is the W.I.A. net frequency in Victoria. I believe there are crystals still available from the W.I.A. disposals. The power input to the final varies between 4 and 8 watts, depending on the h.t. voltage. I have used the transmitter with voltages between 230 and 330 volts. I would recommend not normally going over 300 volts.

The whole unit has been built into a 6" x 4" x 2" chassis, but I wouldn't recommend this unless extreme miniaturisation was the aim. A 6AB8 handles the r.f. side of the works. The circuit is quite standard. It will be noted that no r.f. choke is included in the plate lead of the triode section of the 6AB8, as it was not found necessary, plus the fact there was not enough room for it. The drive to the pentode section should be at least 1.5 mA.

The plate circuit is a standard pi-coupler with a neon in series with a 10 pF. mica capacitor to earth across the p.a. tuning capacitor. This indicates r.f. output and modulation. A 0-50 mA. meter is used to facilitate tuning and loading. The pi network values in this particular unit, with the aerial I am using, work out at 60 turns for L1 on a ¾" former, winding with 26 B. & S. enamelled wire. C1 and C2 as per parts list. C4 and C5 will vary with the type of aerial used. With the trimmer, small variations in loading can be compensated for. The plate current will vary between 15 mA. and 27 mA., depending on the h.t. voltage.

The modulator is a 6GW8 valve. The wiring of this is standard, care only being necessary with the grid lead of the triode section, which is shielded. The modulation transformer is a small replacement type centre tapped speaker transformer. The voice coil leads are not used, being taped out of the way.

For netting purposes, a single-pole, single-throw toggle switch is used to switch the oscillator on.

To control this unit I have used a relay for the following reasons: (1) 1825 kc. is a net frequency, where press-to-talk is desirable, and (2) I had a suitable relay on hand. Instead of a relay an Oak switch can be used. The heaters are arranged in parallel across the 6-volt supply. The relay is supplied from a separate 12-volt line from the power supply. A 6-volt relay would be better here if available, so that the unit could be used with a power supply with only a 6-volt winding. The relay controls the receiver h.t. through one pair of contacts. Additional ideas for switching and power supply circuitry will be included in the concluding article.

That is the description of the transmitter. It works well, and contacts over several hundred miles have been achieved. This should be an ideal starter for 160 metres due to its simplicity and ease of operation.

The power requirements are 230-330 volts at 55-80 mA., 6.3v. at 1 amp. and 12.6v. at 0.1 amp. ●

* 5 Princes St., St. Kilda, Vic.

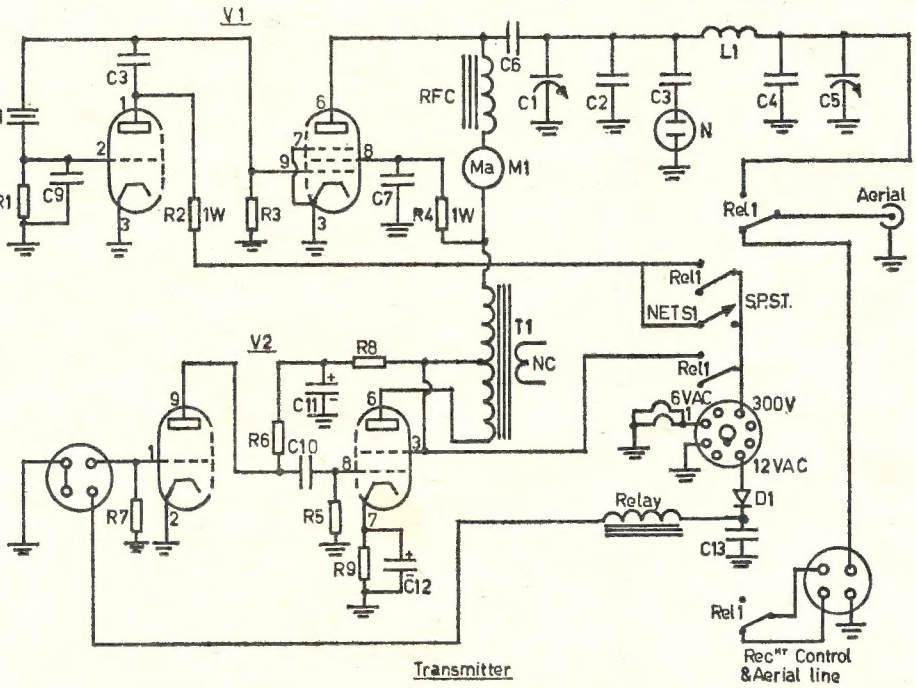

C1—10-100 pF. adjustable.
C2—200 pF. mica.
C3—10 pF. mica.
C4—470 pF. mica.
C5—20-200 pF. trimmer
C6, C7, C8, C10—0.001 μF. paper or ceramic.
C9—47 pF. mica.
C11—4 μF., 300v.w. electrolytic.
C12, C13—25 μF., 40 p.v. electrolytic.
R1, R2—47K ohms.
R3, R8—33K ohms.
R4—18K ohms.
R5—0.68 megohm.
R6—0.27 megohm.
R7—10 megohms.
R9—220 ohms.
M1—0-50 mA. meter.
RFC—small r.f. choke.
T1—Push-pull speaker transformer.
N—Small lead type neon.
S1—S.p.s.t. toggle switch.
Rel. 1—Four-pole changeover relay.
V1—6AB8 valve.
V2—6GW8 valve.
D1—HR25, 1N1763, or OA210 diode.
X1—Crystal (1825 kc.).
L1—60 turns of 26 B. & S. on ¾ inch diameter former, 1¼ inches long winding.

☆

A CAPACITY METER

HOW many fixed capacitors have you lying around the shack, just because the colour code or the markings have been rubbed off? I had about 50 of them, so I decided to do something about it. I do not claim originality of this circuit because the capacity meter was described in March 1952 "QST". The difference being, instead of using an in-built g.d.o., I decided to use the external g.d.o., which I have just completed, in conjunction with the measuring circuit.

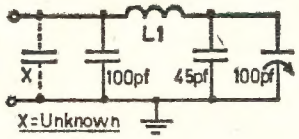

C1—100 pF.
C2—45 pF.
C3—100 pF.
L1—Any convenient coil in low frequency range. 38 turns of 30 S.W.G. on 7/8 inch former.

If your meter is to hold calibration, reasonable care should be used to make everything solid. The frequency used is not important, mine works at approximately 4.5 Mc. and has a range of 0 to 10,000 pF.

With C1 at maximum capacity, bring your g.d.o. to close proximity and resonate to frequency of capacity meter.

To calibrate, connect capacitors of known size, or combinations thereof, and mark the dial at the grid dip point of C1. No attempt is made to give mechanical details (suit yourself). Mine was made on a small chassis with the coil protruding off the end, similar to the g.d.o. coil.

—J. T. Marston, VK4JA.

Publications Committee Reports . . .

That since the 8th June to 13th July correspondence, other than items which are printed in this issue, was received from VKs 5PS and 2RU, both being technical articles.

Current production of Log Books is still lagging the demand, so the Committee agreed to print an additional supply to that already on hand.

The question of altering the wrapper in which "A.R." is supplied was discussed and as it is not practicable to pre-print the correct return address, in the event of an incorrect addressee, it was decided to leave the current design in use. Any reader whose "A.R." is incorrectly addressed should return the old wrapper as follows: Divisional members to their Divisional Secretary; direct subscribers should return the wrapper to P.O. Box 36, East Melbourne, C.2, and in both instances the correct address should be stated on the wrapper. Any change of address should be notified as stated above, and "A.R." should **not** be notified direct. The Circulation Manager cannot alter any Divisional member's address unless the advice is forwarded through the Divisional Secretary, a matter some readers tend to forget.

The list of amended station addresses has, as yet, not been received from the P.M.G., hence production of the 1964/65 "Call Book" cannot be planned at this juncture.

Members are again reminded that all Divisional Notes, etc., should be forwarded direct to their Divisional Correspondent. In no instance should notes be forwarded direct to the Printer, as this will cause further delays and could lead to the omission of the notes. Copy for each issue must be received at P.O. Box 36, East Melbourne, C.2, on or before the 8th of the month preceding publication.

Some readers may have formed the impression that "A.R." is anti-s.s.b. Such is not the case, as a check in the annual index will show that this mode of transmission has received a very large section of the magazine space allocation. Any s.s.b. notes are welcomed, as are technical articles; in addition a sub-editor is still required to compile a regular monthly feature on sideband which was discontinued due to the fact that the previous sub-editor had to give up the task due to business commitments.

☆

ATTENTION EX-G AMATEURS!

EX-G RADIO CLUB

The Ex-G Club now has a world wide membership of exiles from the homeland. The following were recently elected to office for 1964: President W3HQO, Vice-President VO1DZ, Hon. Sec./Treas. W8YHO; Directors, VE3BQP, VE3BPV, WA4SBK, WA2EVH, W7IYW, W2PEO, ZB1A, ZS6BBB, K5QWZ. The club publishes a monthly bulletin which is mailed to all members. W3HQO will supply information on awards issued by the club. World wide club nets are in operation on 14065 kc. on Saturdays at 2100 G.M.T., and 14350 kc. on Sundays at 1900 G.M.T.

TUNING INDICATOR FOR SMALL TRANSMITTERS

M. N. O'BURTILL, VK3WW*

RECENTLY I decided to "clean up" my fixed portable rig. This included building a good modulator and bringing all controls to the front of the chassis. The rig is a modified Command transmitter which operates on 40 and 20 metres, and runs 15 watts input.

Previously I used to hook a multimeter in the h.t. lead to measure current for tuning purposes. The desire to make the transmitter self contained was strong. The shortage of a suitably small meter was evident. The lack of funds to purchase some was usual.

After much rummaging in the junk box, I decided to try the old fashioned "magic eye". The Command transmitter already has one of these (1629), used originally as a calibration check indicator.

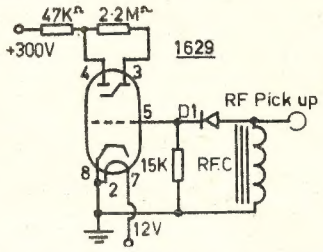

The circuit is quite simple and easy to get going. The 2.2 megohm resistor between plate and target anode can be varied one megohm either way. Any commonly used crystal diode will work.

I use a one-turn loop as r.f. pick-up for the grid. This has to be adjusted to suit the lay out and of course power input of the transmitter.

The valve is mounted horizontally with the key-way pointing downwards. The valve fits neatly into a 1⅛" hole lined with a grommet made by carefully stripping a few inches of cab-tyre flex and using the rubber covering as a grommet.

I have found the indicator to be more sensitive than the average meter and in view of the cheapness of the valves, I think many Hams going portable/mobile will find this indicator very handy. Naturally it will also indicate modulation, which is a useful side effect.

I still have a shorting plug in the power supply which, when removed, enables me to check plate current. However, this is only used when trying the rig on a new antenna or when fault finding. ●

* 3 Maxwell St., Lalor, Vic.

TELEVISION INTERFERENCE TRACED TO REPAIR TRUCKS

ROCKHAMPTON.—Stray signals sending television sets haywire in Rockhampton have been traced to radio-telephones in television repair trucks. Other signals interfering with t.v. reception have been coming from radio-phones of the Capricornia Regional Electricity Board, taxis, and high tension power-lines.

Post Office inspectors investigated after viewers' complaints that pictures were shrinking, fading, and being spoiled by dark bands.

Manager of a Rockhampton television rental company said: "Some of the people who called us were really cranky. Everyone was blaming the sets."

A Post Office spokesman said that the interference had been caused by the companies operating radio-telephones on almost the same frequency as local television stations. "It has been agreed that they will operate on a different frequency in future," the spokesman said. "The changeover has started already but it might take some time to complete."

Interference has been particularly bad on the A.B.C's. Channel 3, which transmits at 85 megacycles. Some of Rockhampton's fourteen radio-telephone services are in the 84 to 85 megacycle frequency.

At Biloela, in the "fringe" area, viewers have complained that screens go blank whenever the local Capricornia Regional Electricity Board switches on its transmitter.

Mr. Lance Bickford, spokesman for Rockhampton radio and television repair men, said: "It seems a bit stiff that the companies operating radio telephones should have to carry all the cost of switching into a new wave band when they were only doing what they were told in the first place."

Mr. Bickford said the same sort of interference could be expected to some extent wherever there were channels between 0 and 3. **One solution would be to adopt the American system of not having any t.v. channels below 100 megacycles, he said.**

—"The Sunday Mail," 21/6/64.

☆

Courier FM100 Transceiver

(Continued from Page 3)

allows sufficient variation in frequency. When ordering crystals, give full details of circuit and capacities involved.

Depending on microphone output, some sets appear to have low modulation. Deviation may be increased simply by substituting 68K resistors for 22K types (R4, R6), plate load resistors of V1, 12AT7, mic. amp. If deviation is excessive distortion will be obvious.

The advantages of fixed frequency single channel operation for two metres are many. No longer do you need a panoramascope or a free-wheeling dial to discover who is on the band. Take a leaf out of the sidebanders' book and get used to push-to-talk single channel operation. With the aid of directive beam antennae, several nets can use the same channel without interference, or by switching crystals an alternative channel can be used. ●

S.S.B. CRYSTALS

Set of Five Gold-Plated Matched Crystals

Mounted in HC6U Holders

Suitable for 455 Kc. I.F's.

Price £16-10-0 per Set + 12½% Sales Tax

Full details on request.

BRIGHT STAR RADIO

46 Eastgate St., Oakleigh, S.E.12, Vic. Phone 57-6387

VK-ZL-OCEANIA DX CONTEST, 1964

N.Z.A.R.T. and W.I.A., the National Amateur Radio Associations in New Zealand and Australia, invite world-wide participation in this year's VK-ZL-Oceania DX Contest.

Objects: For the world to contact VK, ZL and Oceania stations and vice versa. **Note**: VK and ZL stations, irrespective of their locations, do **not** contact each other for Contest purposes.

When? Phone: 24 hours from 1000 G.M.T. on Saturday, 3rd October, to 1000 G.M.T. on Sunday, 4th October.

C.w.: 24 hours from 1000 G.M.T. on Saturday, 10th October, to 1000 G.M.T. on Sunday, 11th October.

RULES

1. There shall be three main sections to the Contest:—
   (a) Transmitting Phone.
   (b) Transmitting C.w.
   (c) Receiving—Phone and C.w. combined.

2. The Contest is open to all licensed Amateur transmitting stations in any part of the world. No prior entry need be made. Mobile Marine or other non-land based stations are not permitted to enter.

3. All Amateur frequency bands may be used, but no cross-band operation is permitted.

4. Phone will be used during the first week-end and c.w. during the second week-end. Stations entering both sections must submit separate logs.

5. Only one contact per band is permitted with any one station for scoring purposes.

6. Only one licensed Amateur is permitted to operate any one station under the owner's call sign. Should two or more operate any particular station, each will be considered a competitor, and must submit a separate log under his own call sign. (This is not applicable to overseas competitors.)

7. Entrants must operate within the terms of their licences.

8. **Cyphers**: Before points can be claimed for a contact, serial numbers must be exchanged and acknowledged. The serial number of five or six figures will be made up of the RS (telephony) or RST (telegraphy) report plus three figures which may begin with any number between 001 and 100 for the first contact and which will increase in value by one for each successive contact. Example, if the number chosen for the first contact is 021, then the second must be 022 followed by 023, 024, etc. After reaching 999, start again from 001.

9. **Scoring**: (a) **For Oceania Stations other than VK/ZL**: 2 points for each contact on a specific band with VK/ZL stations; 1 point for each contact on a specific band with the rest of the world.

(b) **For the rest of the world other than VK/ZL**: 2 points for each contact on a specific band with VK/ZL stations; 1 point for each contact on a specific band with Oceania stations other than VK/ZL.

(c) **For VK/ZL stations**: 5 points for each contact on a specific band and, in addition, for each new country worked on that band, **bonus** points on the following scale will be added:—

1st	contact—	50	points
2nd	„	40	„
3rd	„	30	„
4th	„	20	„
5th	„	10	„

For this purpose the A.R.R.L. Countries List will be used with the exception that each **call area** of W/K, JA, SM, UA will count as "countries" for scoring purposes as indicated above.

10. **Logs. (i) Overseas Stations**:

(a) **Logs** to show in this order—date, time in G.M.T., call sign of station contacted, band, serial number sent, serial number received, points, **underline** each new VK/ZL call area contacted. Separate log for each band.

(b) **Summary Sheet** to show the call sign, name and address (**block letters**), details of station, and, **for each band**, QSO points for that band, VK/ZL call areas worked on that band. "All-band" score will be total QSO points multiplied by sum of VK/ZL call areas on all bands, while "single-band" scores will be that band QSO points multiplied by VK/ZL call areas worked on that band.

(ii) **VK/ZL Stations**:

(a) **Logs** must show in this order—date, time in G.M.T., call sign of station worked, band, serial number sent, serial number received, contact points, bonus points. Use a **separate log for each band.**

(b) **Summary** to show—name and address in **block letters**, call sign, score for **each band** by adding contact and bonus points for that band, and "all-band" score by adding the band scores together; details of station and power, declaration that all rules and regulations have been observed.

11. The right is reserved to disqualify any entrant who, during the Contest, has not strictly observed regulations or who has consistently departed from the accepted code of operating ethics.

12. The ruling of N.Z.A.R.T. Executive Council will be final.

13. **Awards. VK/ZL Stations**: The N.Z.A.R.T. will award certificates to the top scorer on each band and the top scorer in each VK/ZL district, and silver mounted plaques to the top ZL scorers in both the phone and the c.w. sections.

Overseas Stations: Certificates will be awarded to each country (call area in W/K, JA, SM, UA) on the following basis:—

1. Top scorer using "all bands".
2. Top scorer on individual bands.
3. Other certificates may be awarded, to be determined by conditions and activity.

14. **Entries** from **VK/ZL Stations** should be posted direct to N.Z.A.R.T. Contest Manager, 152 Lytton Road, Gisborne, New Zealand, to arrive not later than 31st December, 1964.

Entries from **Overseas Stations** should be posted to N.Z.A.R.T., Box 489, Wellington, New Zealand, to arrive not later than 16th January, 1965.

RECEIVING SECTION

1. The rules are the same as for the transmitting section but it is open to all members of any S.w.l. Society in the world. No transmitting station is permitted to enter this section.

2. The Contest times and logging of stations on each band per week-end are as for the transmitting section except that the same station may be logged twice on any one band—**once on phone and once on c.w.**

3. To count for points, logs will take the same form as for transmitting, as follows: date, time in G.M.T., call of the station heard, call of the station he is working, RS(T) of the station heard, serial number **sent** by the station heard, band, points claimed. Scoring is on the same basis as for transmitting section and the summary should be similarly set out.

4. Overseas Stations may log **only** VK/ZL stations but VK receiving stations may log overseas stations and ZL stations, while ZL receiving stations may log overseas stations and VK stations.

5. Certificates will be awarded to the top scorer in each overseas scoring area and in each VK/ZL call area.

☆

1963 "CQ" CONTEST RESULTS

C.W. SECTION

Over 1,200 logs were received for the c.w. section and contained entries from 110 different countries. W1WY comments: "That just about makes this the top c.w. DX Contest in the world."

The all-band single operator section was won by 5A1TW with 871,750 points. VK6RU came eighth with 509,615 points. In the multi-operator, single tx section, VK5NO was top with 945,248 points. In single band section, on 14 Mc. VK3APJ was third with 264,775; 7 Mc. VK3XB was sixth with 16,887.

Single operator results are as follows:—

VK6RU	A	509,615	784	71	156
VK2GW	A	333,776	631	65	119
VK2PV	A	151,996	344	60	98
VK4TY	A	100,540	324	43	67
VK7SM	A	64,260	222	46	62
VK3ZR	A	40,743	183	34	47
VK2RA	A	15,128	89	24	37
VK3RJ	21	16,368	126	18	30
VK5KO	21	11,856	90	18	30
VK4SS	21	7,935	115	10	13
VK5JT	21	2,128	60	9	10
VK3APJ	14	264,775	798	33	87
VK3TL	14	92,708	346	30	68
VK2APK	14	47,520	204	31	59
VK9GL	14	32,928	239	24	32
VK5WC	14	5,811	66	17	22
VK4EL	14	4,600	38	17	29
VK3XB	7	16,887	151	16	23

PHONE SECTION

Slightly over 700 logs were received from 117 countries for this year's Contest. "A new record which just about makes this the largest Phone DX Contest in the world."

VK3ATN	A	204,800	468	62	98
VK6RU	A	87,444	251	41	85
VK4TY	A	34,310	155	31	63
VK2APK	21	3,402	68	8	10
VK3TL	14	85,202	286	33	80
VK2AHT	14	77,168	264	28	76
VK2JZ	14	20,526	122	22	44
VK5GG	14	18,720	134	20	32
VK2KM	14	17,292	93	23	43
VK3HL	14	15,228	95	19	35
VK2AUS	14	2,320	38	11	18
VK2RA	14	99	5	4	5

"WILLIS" CHASSIS PUNCHES

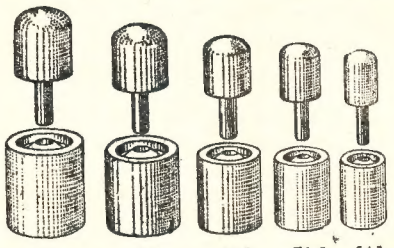

MADE OF FINEST GRADE TOOL STEEL

3/8 in. punch	22/-	1-1/16 in. punch	36/-
1/2 in. „	22/-	1-1/8 in. .. „	38/-
5/16 in. „	22/-	1-3/16 in. .. „	40/-
7/16 in. „	22/-	1-1/4 in. .. „	48/-
5/8 in „	24/-	1-3/8 in. .. „	52/-
11/16 in. „	26/-	1-1/2 in. .. „	56/-
3/4 in. „	28/-	1-5/8 in. .. „	60/-
7/8 in. „	36/-	1-3/4 in. .. „	72/-
1 in. „	36/-	2 in. .. .. .. „	80/-

SPECIAL SIZES MADE TO ORDER

"Q-MAX" CHASSIS CUTTERS

SCREW TYPE

BRITISH MADE

SAVES TIME — GIVES PROFESSIONAL APPEARANCE

SIZES		SIZES	
3/8 inch	20/-	1-3/8 inch	40/6
7/16 inch	20/-	1-1/2 inch	40/6
1/2 inch	20/-	1-3/4 inch	44/1
5/8 inch	20/-	2 inch	46/-
3/4 inch	25/-	2-3/32 inch	72/3
7/8 inch	30/10	2-1/2 inch	85/9
1 inch	36/7	11/16 in. Square	53/-
1-1/8 inch	36/7	1 in. Square ..	55/4
1-1/4 inch	36/7	21/32 x 15/16 in. Rectangular	76/2

The "Q-Max" range of Screw Type Chassis Cutters serve a most useful purpose where holes are to be punched on chassis where components are already mounted. The SQUARE and RECTANGULAR punches save the hard work involved in transformer, plugs and sockets, I.F's., etc., cut-outs.

MULLARD TRANSISTOR MODULATOR KIT

12.5 Watts Output

Basic components include: IT631 input transformer, MT26 mod. transformer, five carbon resistors, semi-adjustable resistor, two OC74 transistors, two OC26 transistors, electrolytic condenser, aluminium chassis.

Price: £9/18/9 inc. S.T.

Write for original Mullard Design Data. (Refer "A.R.," May 1961.)

INSTRUMENT BOXES

Grey Hammertone Finish
includes detachable front panel.

Size: 9" x 7" x 5½" .. **20/-** inc. S.T.
7" x 6" x 4½" .. **17/3** „ „
5" x 5" x 4" .... **15/-** „ „

WORLD GLOBES

"Replogle" World Globes, especially designed for Amateur Stations. World Call Areas clearly marked. Includes day-night time cursor.

Price: £7/17/6 inc. S.T.

WILLIS AIR-WOUND INDUCTANCES

No.	Diam.	Turns per In.	Length	B. & W. Equiv.	Price
1-08	½"	8	3"	No. 3002	5/3
1-16	½"	16	3"	No. 3003	5/3
2-08	⅝"	8	3"	No. 3006	6/3
2-16	⅝"	16	3"	No. 3007	6/3
3-08	¾"	8	3"	No. 3010	7/4
3-16	¾"	16	3"	No. 3011	7/4
4-08	1"	8	3"	No. 3014	8/5
4-16	1"	16	3"	No. 3015	8/5
5-08	1¼"	8	4"	No. 3018	10/6
5-16	1¼"	16	4"	No. 3019	10/6
8-10	2"	10	4"	No. 3907	13/9

SPECIAL ANTENNA ALL-BAND TUNER INDUCTANCE

(equiv. B. & W. No. 3907-7")

7" length, 2" diam., 10 t.p.i., **24/6**

References: A.R.R.L. Handbook, 1961; "QST," March 1959; "Amateur Radio," Dec. 1959.

PRICES STRICTLY AMATEUR NET INCLUDING SALES TAX. PLEASE ALLOW EXTRA FOR FREIGHT

VALVE SOCKETS

McMurdo shock mounted:
9-pin black moulded, **5/- ea.**
9-pin mica moulded, **5/6 ea.**
(Ideal for mobile equipment, microphone input stages, etc.)

Fluon P.T.F.E.:
7-pin type VH337/702 **7/3 ea.**
9-pin type VH499/902 **8/6 ea.**
(Low r.f. loss to 500 Mc.)

Plessy Ceramic Sockets:
7-pin .... **2/- ea.**
9-pin .... **2/- ea.**
7-pin, with skirt .... **2/6 ea.**
9-pin with skirt .... **2/6 ea.**
(Prices include Sales Tax.)

CO-AXIAL NOISE SUPPRESSION CONDENSERS

Ducon Type PNC52 0.1 μF., 50v. d.c.w., 20 amps., **8/3 each** inc. S.T.

Ducon Type PNC51 0.1 μF., 50v. d.c.w., 40 amps., **13/6 ea.** inc. S.T.

Highly effective for mobile work.

WODEN MULTI-MATCH MOD. TRANSFORMERS

UM0	10-Watt Audio		£6/6/6
UM1	30	„ „	£8/5/6
UM2	60	„ „	£11/9/9
UM3	125	„ „	£12/8/0

Prices include 12½% Sales Tax
FREIGHT EXTRA

PI-COUPLERS

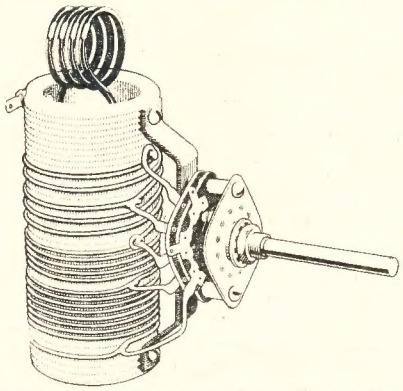

WILLIS MEDIUM POWER TYPE

For use up to 600 watts p.e.p. Match plate loads of 2,000 to 3,500 ohms (Z) and higher into coaxial cable. Operating Q increases on higher frequencies to increase harmonic suppression enabling practical values of tuning capacity to be used on 10 and 15 metres and allowing for wiring inductance (L). Incorporates extra switch section for shunting additional capacity (C) if required, or switching other circuits. Switch rated for 10 amps. at 2,000 volts with contact resistance (R) of 0.8 milli-ohms.

Price: £3/19/6 (inc. S.T.)

WILLIS PI-COUPLER CHOKE

To suit above Pi-Coupler. No resonances within Amateur bands if spaced diameter or more from metal panels. Stands 6 inches high on 1 inch diam. ceramic former. Base mounting bracket included.

Price: 25/- (inc. S.T.)

GELOSO PI-COUPLERS

Type 4/111 for use with parallel tubes type 6146s, 807s, etc.
Type 4/112 for use with single ended tubes type 6146, 807, etc.

Both Types, **Price: 39/6** (inc. S.T.)

EDDYSTONE 250 pF. CONDENSERS

Type 817 condenser, suitable for use with input of all above Pi-Couplers. Rated 1,200 volts r.m.s., ceramic insulation, fit space 2 inches square by 2¾ inches deep. (Output condenser normal small two or three gang b.c. condenser.)

Price: 45/- (inc. S.T.)

DUCON 20 KV. CERAMIC COUPLING CONDENSERS, 500, 1,000 pF.

Price: 12/- each inc. S.T.

SHURE S.S.B. MICROPHONES

American controlled-magnetic, hand-held, specially designed for mobile use, complete with self-coiling cable and press-to-talk switch.

Type 401A High Impedance (50K Ω)
Type 401B Low Impedance (50 Ω)

Price, both types: **£9** inc. S.T.

Miniature mu-metal screened and cored Microphone Transformer

50 ohm-to-grid. Suit Type 401B or any low impedance microphone 50 or 200 ohm-to-grid. One hole (3/8 inch) mounting.

Price: £3/6/- inc. S.T.

WILLIAM WILLIS & CO. PTY. LTD.

428 ELIZABETH STREET. MELBOURNE, C.1 **Phone 34-6539**

A MODERN DX RECEIVER

H. F. RUCKERT, VK2AOU*

THE writer uses the times of low sun activity to re-build his radio station. These periods seem to coincide with major developmental steps, and therefore re-building is also needed to keep up with electronic development. It was 12 years ago that the writer went d.s.b.r.c. with 400% modulation. The trouble at that time was that the few early s.s.b. operators knew how to tune in such a signal and liked the clean modulation and power of the signal, but others who could only understand the call but little else, gave it up with the remark, "Tons of audio but too much over-modulation." Frustrated, I gave up and went back to a.m. with plate and screen modulation and clipper to get a chance to work D.X.C.C. and contests. If we tune across the 20 metre band now we find that all phone QSOs, or at least 90% of the successful callers, work s.s.b.

For the writer the design, building and development of the equipment is the basic half of Amateur Radio. If we say that home construction costs too much, we seem to go about it the wrong way. If one says he can't build the gear because he has not a complete radio lab. at his disposal, he never learned Amateur techniques or he does not know enough about the job.

This receiver was first built about 12 years ago and many times modified, especially as far as the front-end is concerned. S.s.b. called for improved oscillator stability and this could best be obtained with crystal controlled first oscillators and a stable v.f.o. and product detector had to be again re-built. Some thought was given to possibilities of combining certain transmitter and receiver features without adopting undesirable properties of some commercially built transceivers. A certain amount of skill was required to design around mechanical and electrical problems and to make best use of the existing chassis, holes already drilled, and the old but good components and bits and pieces collected over the years. Most of these steps helped to keep the cost of the reconstruction job down to about £20. Labour is not to be looked at as an expense item but as part of the pleasure of achieving something.

THE BLOCK DIAGRAM

The block diagram shows the stages of the receiver and transmitter. The receiver has two r.f. stages. The first mixer contains a triode which is used in the 1 Mc. crystal calibrator oscillator. The first oscillator is crystal controlled and a cathode follower valve helps to obtain the matching to a co-ax cable through which the same oscillator voltage is fed to the second mixer stage of the transmitter. In this way only one set of crystals is required for the receiver and transmitter. The chance of finding one suitable set is very much greater than the chance of obtaining two sets, which can easily be brought to the correct frequencies. The frequency values shown on the diagram are for 20 metre operation.

With first oscillator frequencies above the r.f. frequencies, the first i.f. must be tuned towards lower frequencies as the r.f. values go up from 14 Mc. to 14.35 Mc. This is no problem if the first i.f. is broad banded or if separate capacitor gangs are being used as in this case.

With the first oscillator and the second i.f. at fixed frequencies, the need arises also to tune the second oscillator (v.f.o.) to lower frequencies with rising r.f. values. The second and third r.f. tuned circuits are tuned with the same gang which uses two variable capacitor sections in parallel for the v.f.o. These two segments had to be turned 180° on the axle to obtain the correct frequency shift direction for the r.f. stages and the v.f.o. The capacitor rotors were shrunk on the axle, so that warming up with the soldering iron allowed the segments to be turned 180°.

The v.f.o. is followed by a buffer stage and again the output goes to the second mixer of the receiver and also to the first mixer of the transmitter. The oscillators change first and second place from the receiver to the transmitter in order to have in both cases oscillator frequencies which are not too far away from the mixer input frequencies. In this way the image frequencies and oscillator voltages can be better rejected in the following i.f. stages, so reducing spurious signals. This method helped also to get away with only two mixers in the receiver and transmitter, which again helps to reduce the number of otherwise possible spurious signals.

The transmitter filter and carrier set of crystals has a frequency which is 62 kc. above the frequency of the receiver second i.f. filter crystals. A 5 pF. capacitor parallel to the v.f.o. transmitter gang corrects this difference. The receiver always had two identical capacitor gangs and dials, therefore it was decided to use one to tune the receiver and the other one to tune the transmitter. Two small surplus relays with ceramic insulated contacts are being used to switch the transmitter condenser or the receiver condenser on to the single v.f.o. In this way a single Franklin v.f.o. with buffer stage, one coil and one temperature compensating capacitor combination, acts for the transmitter and receiver, but the frequencies are independently adjustable over a 500 kc. range. One calibrated range covers all six bands.

Three low-gain stages with a double crystal filter follow on the second i.f. The product detector contains the b.f.o. and s.s.b. a.g.c. amplifier. For a.m. a twin diode is used. A noise limiter, S meter valve, two a.f. stages and the power supply complete the set.

The block diagram of the transmitter will be later described, after this part of the set-up is completed.

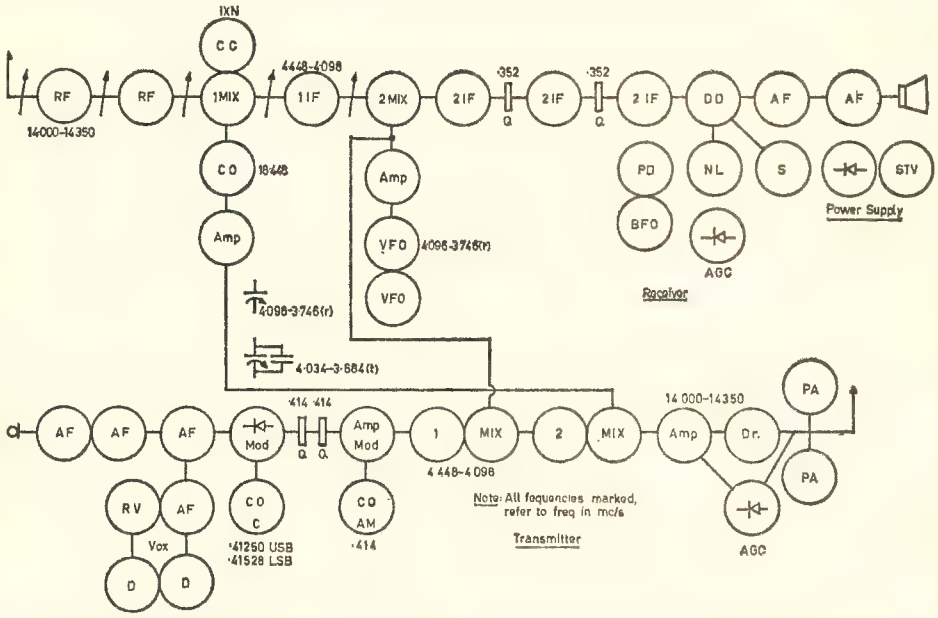

THE CIRCUIT

The r.f. part has six bands of 500 kc. each. In this way the number of crystals for the first oscillator was kept to a minimum, and the six sets of coils and trimmers of the Goerler turret could best be used. Splitting the bands up even further would have caused many electrical and mechanical problems, operating inconvenience, and difficulties in obtaining the necessary parts.

The first tuned circuit is adjusted with the aerial trimmer of 30 pF., because this trimmer is necessary in any case, and the receiver tuning gang did not have the fifth segment otherwise required. The 6BH6 valve is not connected to the a.g.c. circuit, but it may be attached to a manual gain control if

* 25 Berrille Rd., Beverly Hills, N.S.W.

HERE IT IS! THE SPECTACULAR NEW FIVE BANDS 400 WATTS

SWAN-400 S.S.B. TRANSCEIVER

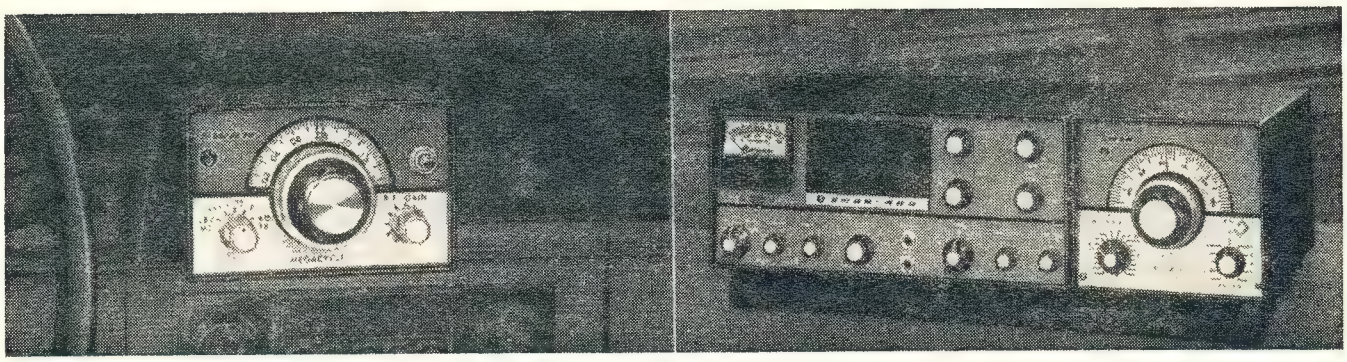

SWAN-406 MINIATURISED CONTROL UNIT, £55/13/9

Miniature design for mobile mounting in conjunction with the Swan-400. May also be used for fixed station operation if desired.

- Phone Band coverage as follows: 3.8-4.0, 7.1-7.3, 14.15-14.35, 21.25-21.45, 28.5-28.7, and 28.7-28.9 Mc. (These ranges can be easily adjusted to cover other segments if desired.)

PRICE LIST (including Sales Tax)

SWAN 512 D.C. Power Supply	£105	3	9
SWAN SW240 A.C. Power Supply w/- speaker, etc.,	£80	8	9
SWAN V.O.X. Control	£20	2	2
SWAN SW240 Transceiver	£250	0	0
SWAN T.C.U.	£84	15	4
SWAN 19B Power Supply, fits T.C.U.	£80	8	9

Australian Distributors:—

W.F.S. ELECTRONIC SUPPLY CO.

225-227 VICTORIA RD., RYDALMERE, N.S.W. Ph. 638-1715

SWAN-400 5-BAND 400W. S.S.B. TRANSCVR., £292/1/0

- Operates with the Swan-406 or 420 Freq. Control Unit, and the Swan-117B, 117AC, or 512 DC Power Supply.
- Transmitter Power: 400w. s.s.b., p.e.p. input, dist. prod. down 30 db. 320 watts c.w. input, 125 watts a.m. input. Two 6HF5 p.a. tubes, 6GK6 driver stage, 7360 bal. mod.; 17 tubes, total.
- High Freq. Crystal Lattice Filter. Common to transmit and receive circuits. 3 kc. bandwidth. Unwanted sideband more than 40 db. down. Carrier down over 50 db.
- Receiver Sensitivity: Better than 0.5 μV. for 10 db. signal-plus-noise to noise ratio. 5½ in. high, 13 in. wide, 11 in. deep.

SWAN-420 FULL COV. FREQ. CONTROL UNIT, £94/3/9

Designed for fixed station operation in conjunction with the Swan-400. May be installed for mobile use if full frequency coverage is desired.

- Full freq. coverage of 10-15-20-40-80 metre bands in 20 ranges of 200 kc. each, including WWV range as follows: 3.4-3.6, 3.6-3.8, 3.8-4.0, 7.0-7.2, 7.2-7.4, 14.0-14.2, 14.2-14.4, 14.8-15.0, 21.0-21.2, 21.2-21.4, 21.4-21.6, 28.0-28.2, 28.2-28.4, 28.4-28.6, 28.6-28.8, 28.8-29.0, 29.0-29.2, 29.2-29.4, 29.4-29.6, 29.6-29.8 Mc.

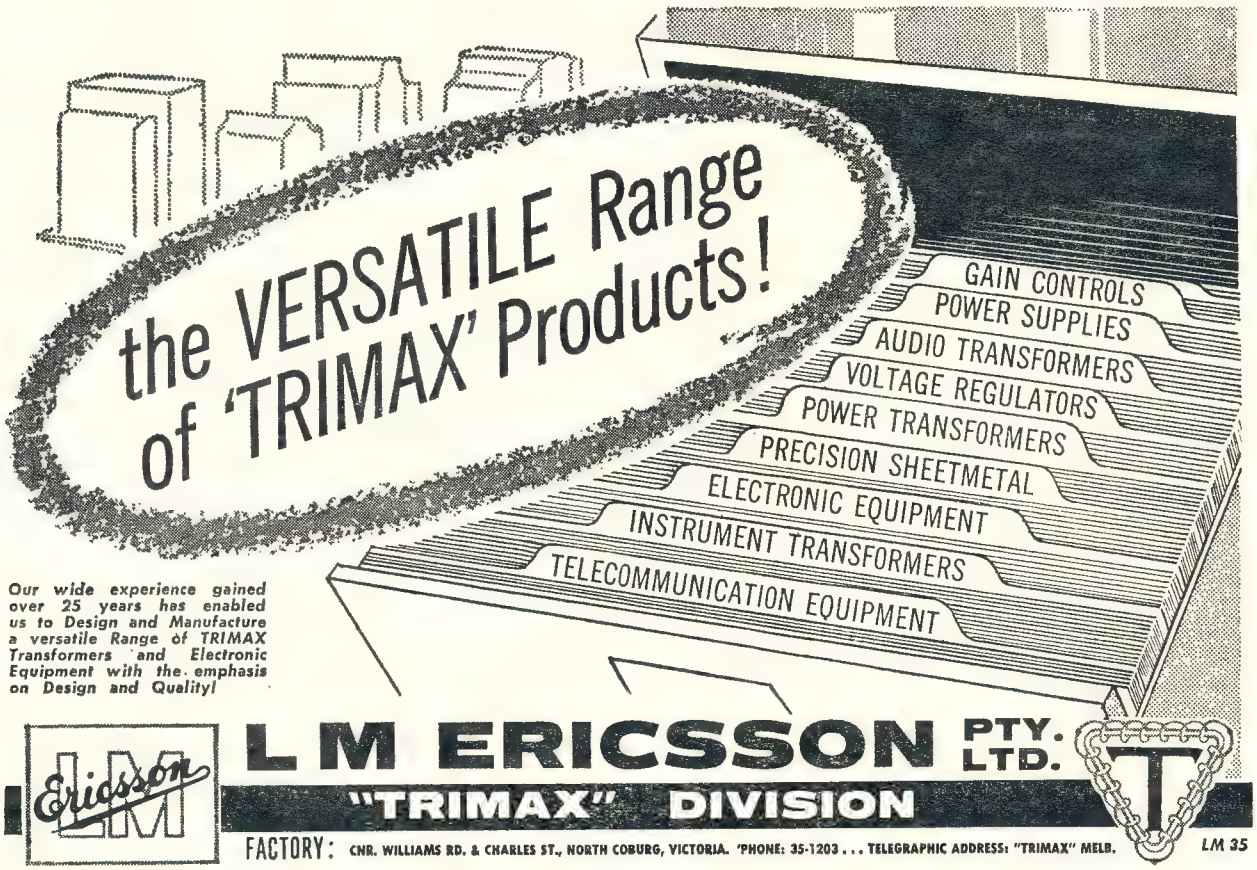

cross modulation is caused by strong near-by signals.

The second and third r.f. tuned circuits are tuned with the four-gang capacitor of 6 to 18 pF. each. The required bandspread of 500 kc. at the various r.f. bands is obtained by connecting the air dielectric variable capacitor and valve electrodes to the hot end of the r.f. coils or on taps and by using the correct value of fixed and trimmer adjusted parallel capacity. The L and C values have to be precalculated, they are later preadjusted in the circuit with the g.d.o. and finally trimmed under working conditions.

The coil details are as follows:—

- 80 and 40 metres: No coil tap and total maximum capacity about 100 pF.
- 20 metre coil tap at 4/5 of turns, 100 pF. maximum total capacity.
- 15 metre coil tap at 2/3 of turns, 75 pF. maximum total capacity.
- 10 metres (1): Coil tap at half of turns, 63 pF. total maximum capacity.
- 10 metres (2): Same as above.

The r.f. gain of the second r.f. stage is controlled manually and also via the a.g.c. network. The first oscillator uses a 6AG5 valve, triode connected, in a well known overtone circuit. It was found that the 80 metre range crystal oscillated far more readily in the overtone circuit than in the basic frequency circuit first used. The crystals for the 40, 20 and 15 metre bands are operated at the frequency which is close to the third harmonic (I don't want to join in the argument of harmonic v. overtone), and the crystals for the two 10 metre band segments work near frequencies which are near the fifth harmonic. These two crystals will later be replaced by those which operate at a lower overtone, to obtain more oscillator voltage. They were originally for 6450 kc. and the writer ground them down with valve grinding compound on a thick glass plate.

To reduce pulling effects, link coupling is used to bring the c.o. voltage to the first mixer grid. The 9002 valve acts as cathode follower from which the c.o. voltage is fed to the second mixer of the transmitter. A low Gm valve, which can take several volts of r.f. without distorting the signal, is being used here. The pentode of the 6U8 serves as first mixer, whilst the triode operates the 1 Mc. crystal calibrator. A Ge-diode causes distortion of the 1 Mc. signal and in this way strong harmonics are obtained for calibrating purposes up to 29 Mc. This calibrator gives a stable signal and is therefore also being used to check the receiver gain and bandwidth, as well as the stability and relay reliability. A 100 kc. crystal may be used if so desired.

The receiver is built on three chassis installed on top of each other in an angle iron frame. The lower or r.f. chassis contains also the first wideband i.f. filter tuned to cover the first i.f. band of 500 kc. Fixed wideband tuning was employed because tuning would have been inconvenient in this case. Great care was exercised in the design of the v.f.o. None of the components could have a great temperature coefficient, which excluded iron or ferrite coil cores or any other capacitors than fixed NPO ceramic or solid built air dielectric variable capacitors. Therefore the trimmers of the TCc differential circuit are small but rigidly constructed air capacitors with screw adjustment (no ceramic or mica trimmers). The coil was glued to a ceramic former, fixed in a shielding can and air-tight soldered up, to prevent humidity affecting the coil or built-in capacitors. An NPO feedthrough capacitor of 27 pF. is soldered into the can wall. 2 to 3 pF. capacitors connect the tuned circuit to the 12AT7 v.f.o. valve operating in the Franklin circuit, which seems to be the best choice.

Parallel to the tuned circuit are two series connected combinations of a 15 pF. air dielectric trimmer each and a P100 (TCc) and N3300 (TCc) ceramic capacitor of 50 pF. each. In this way one can bring more N-TCc and less P-TCc capacity in the circuit without changing the total circuit capacity value. This method is very much more convenient than the soldering of different TCc capacitors in the circuit, waiting one hour to cool down the adjacent components, running the set for a warm up period, and finding out that the temperature compensation is still not right after two more hours. The warming up time stability and also the long term stability of this v.f.o. is about ten times better than the drift of the v.f.o. in my BC221, which has a separate power supply similarly stabilised. The relay switching is extremely accurate and does not cause frequency jumps as many switches do.

A buffer stage with a 6AK5 valve follows the v.f.o., which has a broad band plate circuit with a low impedance output tap, from which the v.f.o. voltage is fed to the receiver second oscillator and transmitter first oscillator. The relays obtain 7v. and 100 mA. d.c. from the 6.3 filament voltage via a Si-diode and a 300 μF. charging capacitor.

The second chassis contains the i.f. amplifier and associated stages. It is advisable to use a fair amount of selectivity in the early stages to guard against far off resonance signals and reduce cross modulation and spurious signals. Therefore, four tuned circuits operating on the first i.f. are used with one low gain valve in between. The other reason is that the low frequency end of the v.f.o. range falls in the high

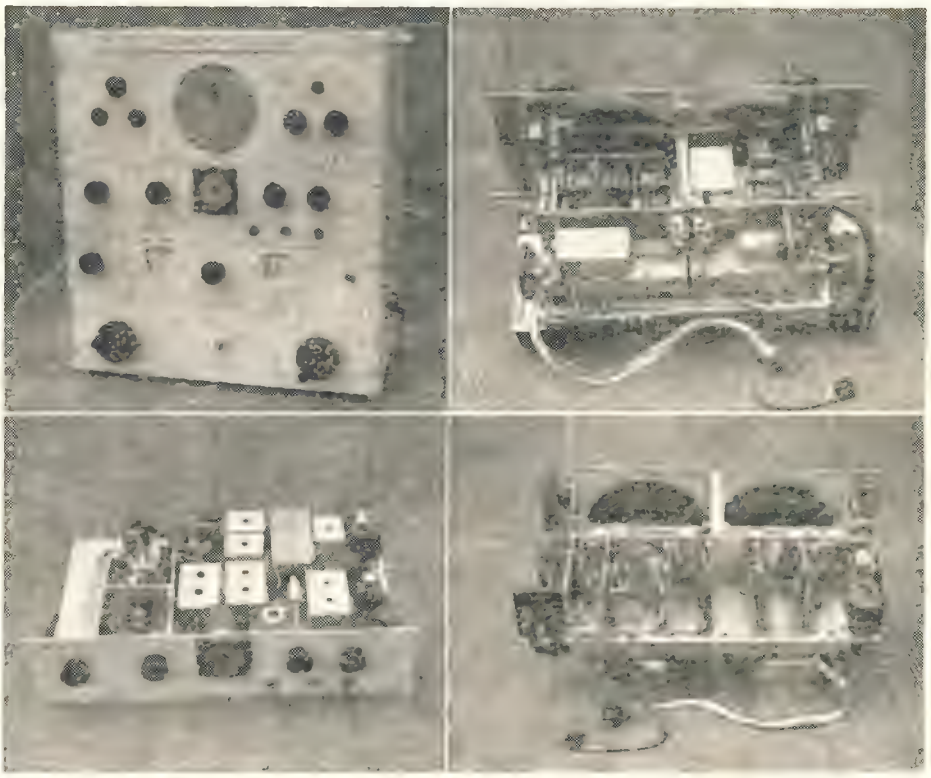

Top left: The receiver with the three chassis on top of each other, the two dials in the lower r.f. chassis and the speaker in the a.f. chassis. The knobs for the band switches are at either side of the lower chassis. This method gave the best layout with regard to r.f. requirements and the least mechanical difficulties. The dials are also home made. The sub-division of the receiver on three chassis reduces the table space requirements and modifications are easier incorporated or whole chassis can be replaced.

Bottom left: The i.f. chassis has on the left side the 1st i.f. stage with the tuning capacitor. The centre portion contains the many home-made shielding cans for the crystal filter i.f. tuned circuits. The S meter turns over 270 degrees.

Top right: R.f. chassis containing in the front section the Goerler turret and the crystal oscillator switch with the ferrite coils, fixed NPO ceramic capacitors and the crystals mounted around the switch. Octal valve holder contact springs are directly soldered to the switch which holds the crystals. The v.f.o. coil box is in the middle, and behind these are the relays (the covering shield was removed to take the picture). The two four-gang air capacitors are in the rear lower quarter. They are completed shielded and the stators are machined from silumin blocks. The rotors are shrunk on to a ceramic axle, which is held in spring loaded ball bearings.

Bottom right: R.f. chassis as seen from beneath. This shows the clear layout of the r.f. section with all valves in line as shown in the circuit diagram. Behind the valves are small shielded compartments to accommodate the small components like resistors and by-pass capacitors.

frequency part of the first i.f. band, which called for sufficient selectivity to prevent overloading of the i.f. amplifier. No trouble was experienced because the v.f.o. runs 352 kc. below the corresponding first i.f. tuning frequency. This set of circumstances could have been avoided altogether if a different set of oscillator crystals had been available. Three sets had been worked out which had no low order harmonics and frequency combinations falling in r.f., 1st i.f., or 2nd i.f. frequencies, a requirement to prevent beat notes and spurious responses. During a stage of the receiver development a mixer-v.f.o. with only one crystal and other attractive features had been used, but the undesired beat notes "did beat me too" and I gave up.

The coils of the 2nd i.f. tuned circuits are identical, but the fixed parallel capacitors are different in all four cases to compensate valve and circuit capacity differences. A four gang capacitor tunes the 1st i.f. circuits. Inductive stray coupling and slight capacitive coupling result in enough bandwidth so that this 1st i.f. capacitor needs only re-adjusting in 100 kc. steps. The same is true for the aerial trimmer. All i.f. stages are connected to the manual gain control as well as to the a.m. or s.s.b. a.g.c., which may be switched off. The second mixer uses a 6L7 valve —any type will do here—whilst the first mixer tube had to be a low noise t.v. type.

The existing unmodified 2nd i.f. amplifier has been described before in "A.R." The Telefunken type double crystal filter with two crystals and variable bandwidth is employed. The sketch shows the tap positions in % inductance on the pot core i.f. coils. The i.f. crystal filter is basically very similar to the well known HRO circuit, both using a bridge circuit, phasing capacitor and detuning of the i.f. circuit to vary the bandwidth. Differences are in the following refinements: The xtal is connected to taps of the adjacent i.f. coils to obtain the all important (often overlooked) matching. The correct tap position depends on the crystal Q, the operating frequency, and the Q of the tuned circuit as well as its L/C ratio. If the crystal taps are too close to the hot coil end, the bandwidth will be too narrow and a deep notch will occur between sharp peaks. If the crystals are placed too far down from the hot end, the selectivity will be far too low and the crystals lose their value. The maximum bandwidth required is also to be considered in this respect.

The phasing trimmers of 80 pF. are adjusted and fixed. The first trimmer is set in such a way that the pole (notch) of the response curve is placed 1-1.5 kc. below the lower corner of the flat top i.f. response at maximum bandwidth (3 kc. at —6 db.), whilst the second trimmer is similarly set but above the upper corner frequency of the flat top response band. How deep the notches are (—80 to —100 db.) and how little signal shows up outside the crystal filter response as side lobes, depends mainly on the degree of shielding of all i.f. leads and components to prevent coupling around the crystal filter. V.h.f. or signal generator design methods are called for here. With the other i.f. tuned circuits the side lobes can be kept well below —60 db. and the flat top range can be made quite flat.

On either side of the two crystals are 7-14 pF. air dielectric variable capacitor segments of a four-gang capacitor with insulated rotor and stator, completely shielded. In both cases one segment tunes the i.f. circuit to a higher i.f. and the other segment to a lower i.f. This continuous detuning results in a symmetrical and narrower i.f. passband without affecting the gain. With a bandwidth of 5.7 kc. —80 db. down and 3 kc. to 3.3 kc. at —6 db., this set-up is as good as a set of mechanical filters. This circuit has been used in i.f. amplifiers ranging from 130 to 1,800 kc. The b.f.o. can be used as signal generator and the a.g.c. as v.t.v.m. to align the i.f. circuits.

For a.m. demodulation and a.m. a.g.c. the twin diodes of the 6H6 are being used in the usual fashion. The cathode of the a.g.c. diode has a 1.5v. positive bias, so that weak signals do not operate a.g.c. system. The signal diode is connected to a noise limiter "borrowed" from an early Collins receiver.

A third mixer—also called product detector—is used for s.s.b. and c.w. reception. The 6AJ8 valve has a heptode as mixer and a.f. amplifier and a triode operating as b.f.o. valve. The difference frequency of b.f.o. and 2nd i.f. passes through the RC filter connected to the plate of the heptode. Several volts of a.f. signal are so obtained. The load resistor of 200K ohms and 20K ohms acts as a voltage divider for the a.f. voltage. The whole voltage is brought through a separating resistor of 100K ohms to a Ge-diode to obtain an a.g.c. voltage several times stronger than the i.f. signal to achieve an effective s.s.b.-c.w. a.g.c. action and to ensure that the i.f. signal at the product detector is well below the b.f.o. voltage. Both requirements have to be met to obtain low distortion and good s.s.b.-c.w. action, and this circuit is a simple way of achieving both. With the b.f.o. switch S4a the segment S4b adds a 1 μF. capacitor to the a.g.c. line to achieve the slower decay of the a.g.c. voltage needed for s.s.b.-c.w. reception, and this allows the use of the S meter. The S meter instrument has a rectifier built in, which helps to obtain the desired logarithmic sensitvity.

The top chassis contains the two-stage audio amplifier of conventional design. The final valve can be switched off with switch S6a and S6b if the headphones are connected to the a.f. preamplifier stage.

The power supply now uses silicon diodes which reduce greatly the heat formerly developed by the big rectifier valve. A 150v. 20 mA. voltage stabiliser is included and placed near the 1st oscillator. The v.f.o. plate voltage is also connected to this stabiliser.

OTHER POINTS

The slugs of the plate circuits of the c.o. are of Q2 ferrite, which is good up to 50 Mc., and this core material has a high permeability, giving a wide L adjustment range. The c.o's. were first checked with an absorption type fre-

(Continued on Page 15)

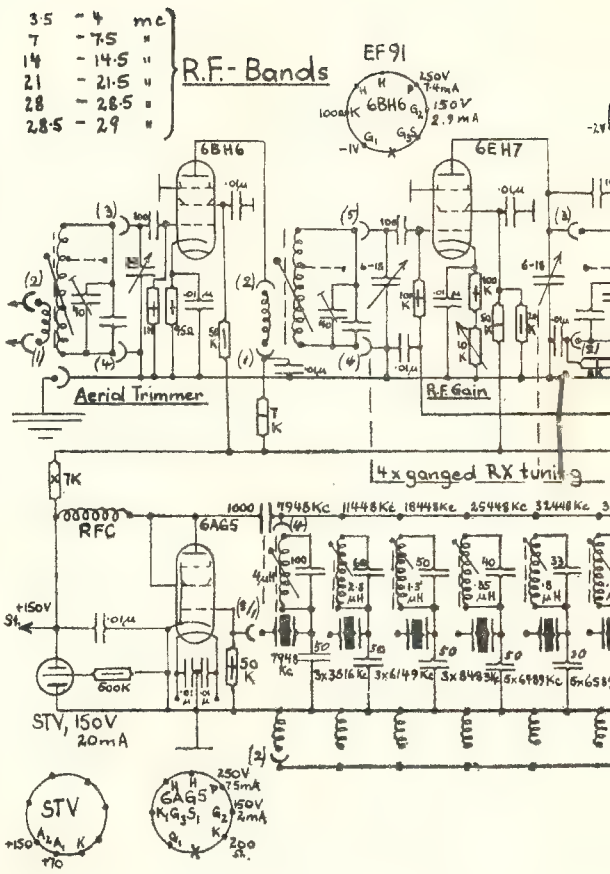

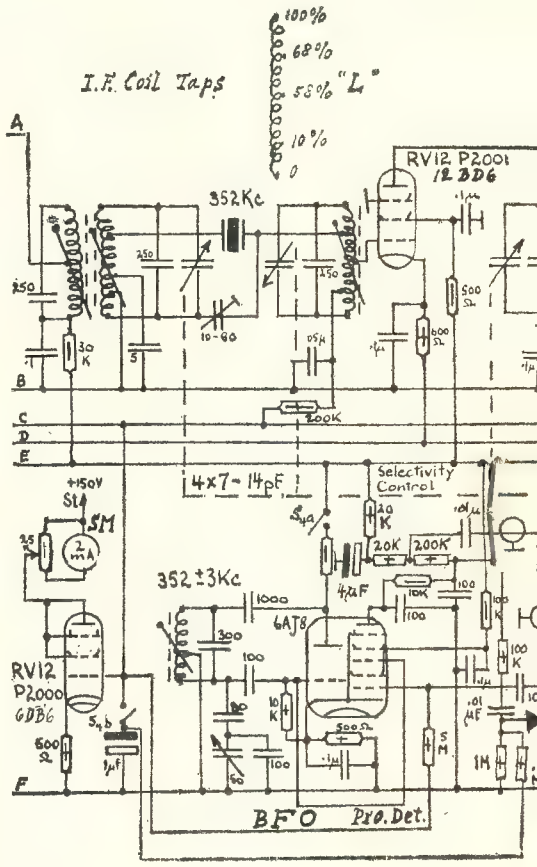

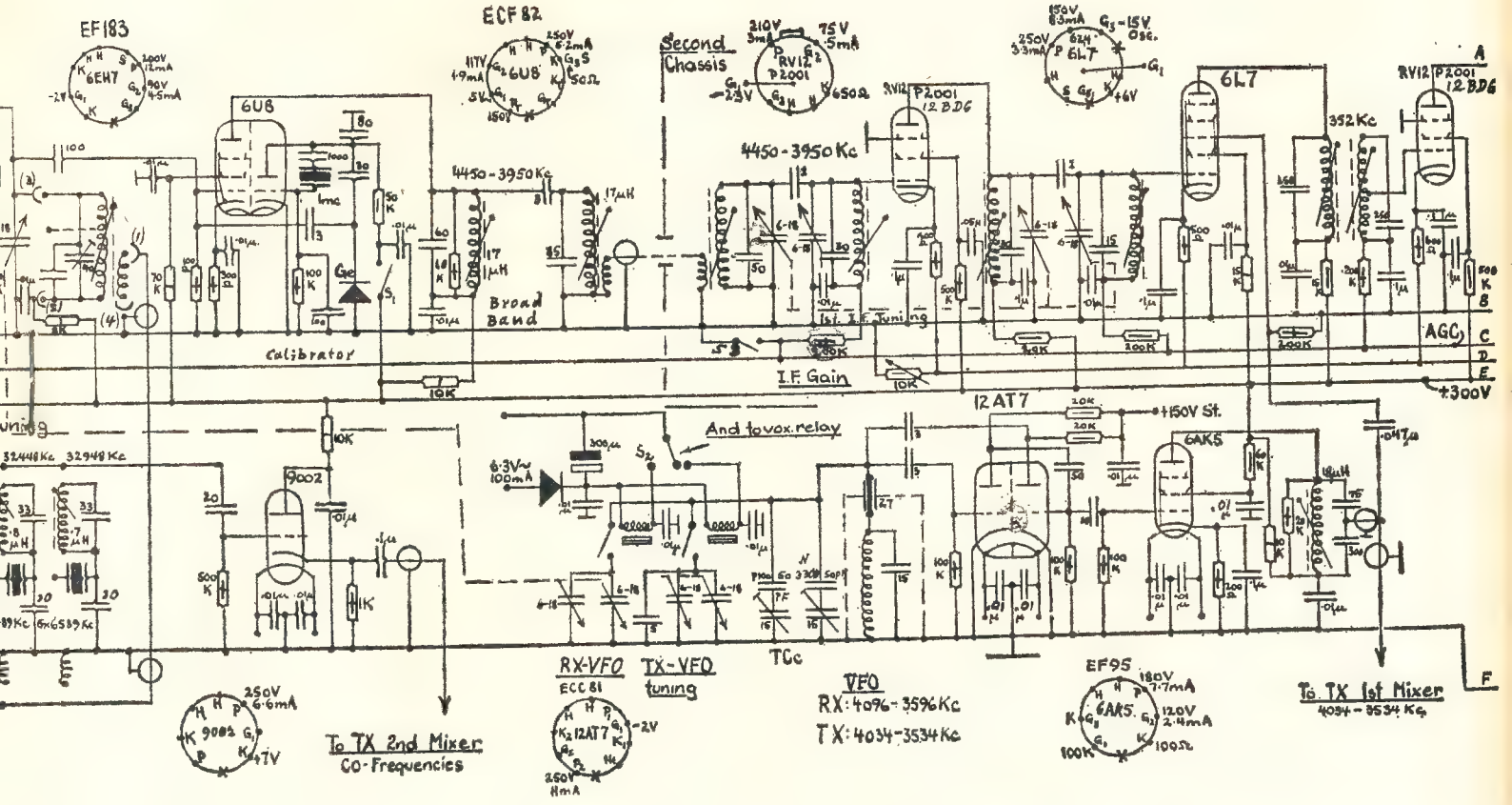
EF183
ECF82
Second Chassis
RV12 P2001 12BD6
6L7
RV12 P2001 12BD6
6U8
4450-3950 Kc
Broad Band
Calibrator
I.F. Gain
AGC
+300V
12AT7
+150V St.
And to vox. relay
6AK5
9002
RX-VFO
TX-VFO tuning
ECC81
12AT7
TCc
VFO
RX: 4096-3596 Kc
TX: 4034-3534 Kc
EF95
6AK5
To TX 2nd Mixer
Co-Frequencies
To TX 1st Mixer
4034-3534 Kc

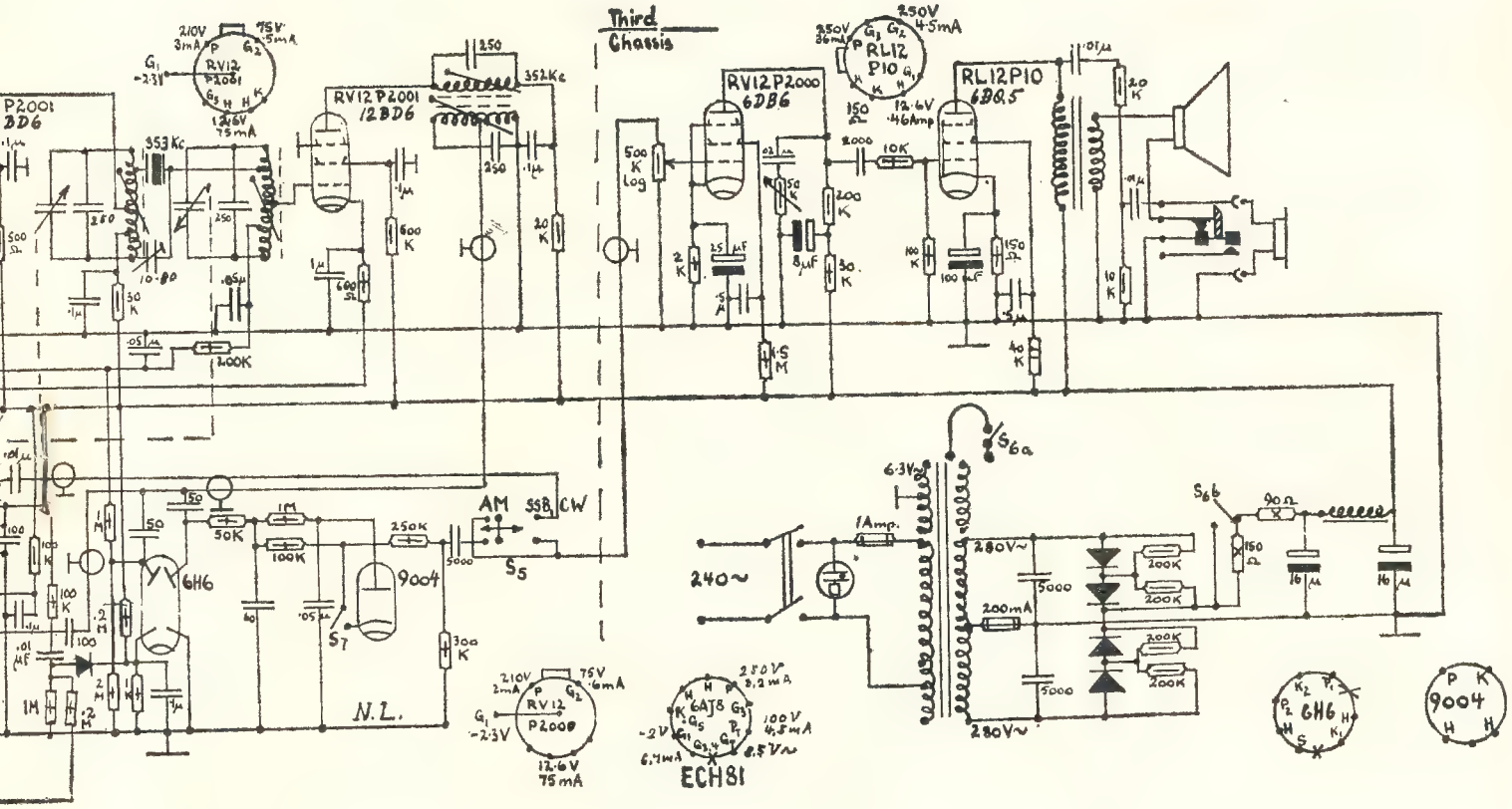
Third Chassis
RV12 P2001 12BD6
RV12 P2000 6DB6
RL12 P10 6BQ5
6H6
9004
AM
SSB
CW
N.L.
240~
280V~
ECH81
6H6
9004

FOSTER DYNAMIC MICROPHONES

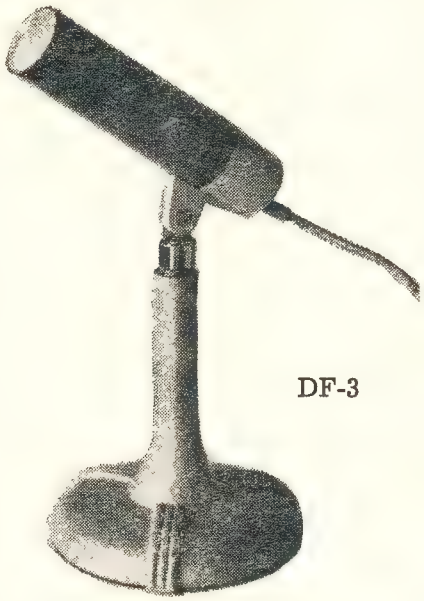

DF-3

SPECIFICATIONS:

Output Impedance .... 50 ohms or 50K ohms
Effective output level .... —55 db. [0 db. = (one) 1V. Microbar]
Frequency response .... 50 to 15,000 c.p.s.

OMNI-DIRECTIONAL DYNAMIC:

Plastic Diaphragm.
Size: 4½" long, 1¼" diameter.
Cable: 12 ft. of P.V.C.
Swivel fits 5/8" 26 t.p.i. Stands.
Colour: TWO-TONE GREY.

Retail Price 50 ohms: £4/7/9 + Sales Tax 10/11
Retail Price 50K ohms: £4/10/0 + Sales Tax 11/3

A QUALITY PRODUCT FOR TAPE RECORDERS & P.A. USERS

Marketed by **ZEPHYR PRODUCTS PTY. LTD.**
58 HIGH STREET, GLEN IRIS, S.E.6, VICTORIA Phones: 25-1300, 25-4556

Manufacturers of Radio and Electrical Equipment and Components

Agents: D. K. Northover & Co.; Neil Muller Ltd.; Homecrafts (Tas.) P/L.; Jacoby, Mitchell & Co. P/L.; T. H. Martin P/L.

GALAXY S.S.B. TRANSCEIVERS

SMALLEST 300 WATT S.S.B./C.W. TRANSCEIVERS ON THE MARKET
EXTREMELY SENSITIVE RECEIVERS

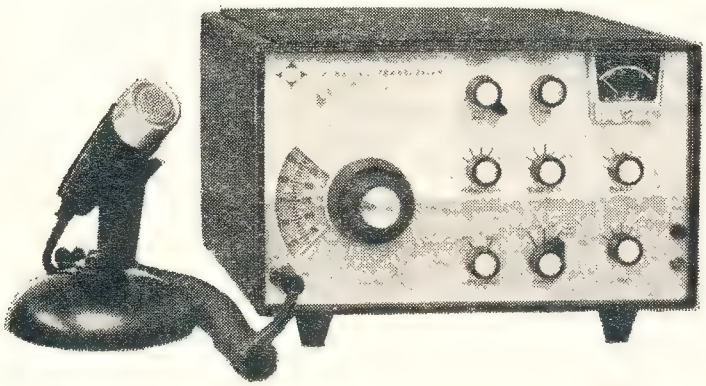

Size 6" x 10" x 11"—13 lbs. **Internal v.f.o.,** 500 kc. coverage all bands. Dual vernier tuning 12 : 1, 72 : 1 ratios. Selectable sidebands without frequency shift. A.v.c.-a.l.c., 9.0 Mc. crystal filters, 55 db. unwanted sideband suppression. Audio-a.v.c. transistorised.

Optional plug-in units for vox, outboard v.f.o. and crystal calibrator.

Two models, same size, prices **include** sales tax.

GALAXY III. 80-40-20 Metres - - £230
GALAXY V. 80-40-20-15-10 Metres £300

FOR MORE DETAILS, CONTACT THE AUSTRALIAN DISTRIBUTORS:

SIDEBAND ELECTRONICS ENGINEERING (ARIE BLES)
33 PLATEAU ROAD, SPRINGWOOD, N.S.W. Phone 394

YOUR PYE REPORTER, PTCA-116, Mk. II.

PART TWO—THE TRANSMITTER

DAVID PRIESTLEY, WIA-L3163*

As a follow up to last month, here is the procedure to line up your Pye Reporter Mk. II. transmitter.

Before I commence, may I give thanks to "The Master", Jack Kelleher, VK3AIJ, for the help he gave as far as his time was concerned.

Pertinent details for transmitter line up are as follows:—

Signal frequency: 53.032 Mc.
Crystal frequency: 5892.4 Kc.

Coil numbers are taken from the circuit of the PTCA-116 Mk. II.:—

L6—2 turns (this is the link).
L7—17 turns 16 g. enamelled wire (one turn spaced).
L9—5 turns 18 g. tinned copper wire (one turn spaced).
L12—5 turns 18 g. tinned copper wire (one turn spaced).
L13—17 turns 24 g. enamelled copper wire.

Coils L9 and L12 should be dipped for resonance at 53 Mc. The Philips trimmers on L9 and L12 will do this adequately.

Tank coil L7 is 11/16" in diameter. The condenser C56, which is in series with L7, will need to be slightly higher in value, preferably about 75 pF. These are readily obtained through trade houses.

Coil L13 must be dipped to 17.6772 Mc., this being the third harmonic of the transmitter crystal. Great care should be taken here to ensure that the second harmonic is not tapped, because this will cause a signal to come out in the middle of the Channel 0 spectrum of 45-52 Mc. The "doughnut" channel enthusiasts don't appreciate hearing CQs whilst they view the test programmes. However, a quick check with a good receiver whilst the crystal oscillator only is working will soon tell.

Now apply high tension to the buffer 6AQ5 and the power amplifier QV04/7 and feed into a dummy load. Tune the tank circuit for a glow in the dummy load and then peak trimmers C57 and C64 to increase the driver output and grid input circuits.

Now adjust the slug in L13 and watch the brilliance of the dummy load. It will increase to a point and then decrease. The brightest point is, of course, where to leave the slug.

However, at this point, don't get wildly enthusiastic and start calling CQ. You'll get as far as if you stood at the door of your shack and screamed your silly head off.

The modulator in these sets is exceptionally good and over-modulation is not hard to obtain. The only difficulty is that the double button microphone is more than likely to be worn out. For the price of a single button insert and about ten minutes work, the modulation returns to near perfection.

To replace the double button microphone, it will be noted that the middle wire in the mike itself goes to earth, and is also the earth return for the press-to-talk button. Remove this wire from the centre of the insert and connect it direct to the press button. The other two microphone wires now go to the respective take-off points on the single button insert. A further piece of work is to put a jumper wire across the electrolytic condenser C74.

Now, fire her up and equip yourself with a pair of headphones. Using an isolating condenser, to stop the h.t. reaching the phones, tap into the h.t. tank circuit feed point (at the r.f. choke), and put the other end of the phones to ground. Press the button and you should hear every little noise in the room loud and clear. Don't be disheartened with downward modulation, nearly all of those using these sets have it.

The output can be improved by adjusting the link to give maximum brilliance in the dummy circuit.

To make sure that nothing comes adrift, borrow the XYL's nail lacquer and dob it liberally on to anything that looks like it will move with constant vibration.

Now we can hook our newly modified set to the aerial and try for a call. Using the test jack on the side of the case, insert your multimeter probes into pins 5 and 7 and read off the p.a. plate current. Tune C56 for a dip and you will be ready for all those suitably equipped to hear you.

It may be necessary to replace the metal rectifiers in the power supply with silicon diodes. The metal rectifiers are worn out but be sure the diodes are of a 1 amp. variety.

Finally, the frequency of the crystal may be slightly off the net frequency of 53.032 Mc. Put a Philips trimmer across the crystal and the slight amount of pull necessary should be fairly readily obtained. ●

* C/o. R.A.A.F. Base, Werribee, Vic.

W.I.A. D.X.C.C.

Listed below are the highest twelve members in each section. New members and those whose totals have been amended will also be shown.

PHONE

Call	Cer. No.	C'nt-ries	Call	Cer. No.	C'nt-ries
VK5MS	24	306	VK2JZ	61	213
VK5AB	45	301	VK6KW	4	211
VK6RU	2	300	VK3WL	14	211
VK6MK	43	293	VK3ATN	26	204
VK3AHO	51	285	VK4HR	12	192
VK4FJ	21	278	VK4RW	23	186

C.W.

Call	Cer. No.	C'nt-ries	Call	Cer. No.	C'nt-ries
VK3KB	10	320	VK6RU	18	260
VK3CX	26	303	VK3AHQ	79	245
VK2QL	5	301	VK3ARX	66	242
VK4FJ	29	296	VK3XB	75	238
VK3NC	19	286	VK3YL	39	231
VK2AGH	71	262	VK2EO	2	230

OPEN

Call	Cer. No.	C'nt-ries	Call	Cer. No.	C'nt-ries
VK6RU	8	306	VK3NC	77	287
VK4FJ	32	305	VK3HG	3	274
VK2ACX	6	300	VK3JA	43	252
VK2AGH	83	296	VK7LZ	23	242
VK6MK	74	295	VK4HR	7	233
VK3AHO	76	289	VK2VN	18	233

New Member:
VK3ACD 94 104

AMATEUR FREQUENCIES:
USE THEM OR LOSE THEM!

A Modern DX Receiver

(Continued from Page 12)

quency meter and synchronising of oscillation by the crystal was observed at frequencies which were as high as the ninth harmonic of the crystal. With the slug further screwed into the coil, the strength of the signal near the ninth harmonic became weaker, but the frequency was practically unchanged. Finally, output could be found near the 7th harmonic and the signal near the 9th harmonic disappeared. By screwing the slug deeper in, the same effect was observed near the 5th and 3rd harmonic, but the signal gained in strength as was to be expected.

Switch S2 operates the v.f.o. relay for receiver or transmitter operation. The switch has a neutral position and vox operation can then take over by connecting the vox relay parallel to the contacts of this switch.

The b.f.o. tuning capacitor covers a range of plus or minus 4 kc. and the plus or minus calibration from the centre position can be used to determine the correct carrier frequency of s.s.b. or c.w. stations, because they are tuned to corner frequencies of the flat top i.f. passband. Resetting the b.f.o. is all that is required to change from one sideband to the other, and this is usually combined with the band change. The use of c.o. frequencies for the first oscillator, which are for some bands on the other side of the r.f. band, would have caused complications, because then on some bands the 2nd i.f. tuning and v.f.o. tuning would run in the opposite way than on the other bands. When planning this type of equipment construction it is advisable to work out all frequencies of the r.f., c.o., 1st i.f. and 2nd i.f. for both band ends.

The numbers in brackets are contact numbers on the turret and c.o. range switch.

It is intended to build the transmitter in a similar manner on three chassis of the same size.

How good is the receiver? An Amateur friend, a ship's wireless operator, who visited many U.S. Amateurs and operated their gear, said, "This receiver handles c.w. and s.s.b. better with more stability and ease of adjustment and receiver flexibility than many very expensive commercial U.S. receivers." The ease of incorporating modifications and not having to worry about re-sale value are further bonus points. ●

SWL

Sub-Editor: Chas. Aberneathy, WIA-L2211
30 Urunga Parade, Miranda, N.S.W.

The response I have had from members concerning our page is not great. One finds that it is left to a certain few, surely these days there must be enough active listeners around to keep me supplied with information to fill our page, which over the months has diminished in size. All that is required is a note on your doings, brief, and to the point, maybe a comment or a suggestion. It's as easy as that, so what about it chaps?

ANTENNAE

Due to the fact that any length of free wire in space acts as an efficient radiator or interceptor of radio frequency energy at one fundamental frequency, and the harmonics of that frequency, it is a difficult problem to make an antenna work over a wide range of frequencies. All types of all-wave antenna systems for best results use a matching transformer between the lead in and receiver. In many instances, reception can be improved by the addition of an antenna coupler between the feedline and the receiver, and in all cases the r.f. image rejection will be increased.

Normally the coupler will be adjusted for optimum coupling, or maximum image rejection. By detuning the coupler, it can be used as an auxiliary gain control to reduce the overloading effect of strong local signals.

A simple antenna coupler circuit will be found in the "Radio Amateur's Handbook." Easy to construct and will fit into a box 5 x 4 x 3 inches. If you require information on the coupler, it will only cost you a stamped addressed envelope.

A type of antenna giving good results and using no matching tx is the General Electric Vee Doublet. This is one of the best all-wave antenna systems and requires a span of 50 ft. The Hawkins triple vee doublet is essentially similar, the only advantage of the triple vee is that it requires only a span of 40 ft. instead of the 50 ft. required by the G.E. system. Assuming lowest resonance for both types at 6.1 Mc., the use of the triple vee is sometimes desirable when there is not enough available space for conventional doublet or a half-wave antenna. The triple vee requires about one-sixth less length of span for a given frequency than a resonant half-wave single wire. For example, at 7 Mc. an ordinary half-wave aerial is about 67 ft. long. The triple vee resonant at the same frequency is only 54 ft. long. The triple vee is somewhat less directional than a single wire, its overall efficiency is about the same. It has a lower Q so it can be used over a wider band of frequencies than a single wire, and is a good aerial for a limited space. The spacings between the ends of each vee should be about 10 per cent. of the length of the antenna. A sketch of either the Triple Vee or the G.E. Vee Doublet may be obtained by sending a stamped addressed envelope. Remember for all aerials, "How high is the sky". Sid. L2258.

Our congratulations go to the following members for their respective wins in the 1963 VK-ZL-Oceania Contest: L2033, L3183, L6021 and BERS195.

NEW SOUTH WALES

Attendances at the monthly meetings have been fair, but this is only to be expected during the cold weather. It is pleasing to note that from time to time that our country members, who happen to be in Sydney, call in to the meeting. I feel sure that they are pleased with the assistance they receive as would many more if they were to come along.

Keith L2269 tells of the purchase of a t.v. set and being a new t.v. area, well, I guess until the novelty wears off shall not be doing any s.w.l'ing. Ross L2233-VK4 has logged on 14 Mc. W0, W5, W6, ZLs and VR2. When you are in Sydney later this year we hope to see you at No. 14. Ross L2290-2ZKB is busy derusting and undercoating a tower. Also preparing a rig to get on the air for his first CQ. He is also busy with c.w. as he hopes to sit for the full ticket in October. Our good wishes go to Ross. Don L2022 is troubled with local interference over a period, but on 7 Mc. c.w. has received HK, KL7, GI, VE and OA. When you are in our city during Sept., Don, don't forget to drop in at our meeting on the third Friday.

VICTORIA

Recently I had the pleasure of meeting Mac L3074 for the first time and if he is a sample of the s.w.l. down south, then they must be a mighty fine lot of chaps. In a very informative letter from Eric L3042, mention is made that there are quite a few active s.w.l's. in VK3, and being Inwards QSL Manager in that State, suggests that if QSLs are any indication a rival to his efforts will be Greg Earl, L3138. As at the end of May this year, Eric has sent out 600 reports, and received QSLs from 93 countries. Heard recently on 14 Mc. c.w. were LU6, W3FMC/MM, 7 Mc. c.w. SM7, VP9, HK4, VR2, YN7, YV1; 3.5 Mc. c.w. DU7, W6, JA8; 1.8 Mc. c.w. VK2s, 5 and 7. With Eric's many interests, I really don't know when he gets time to listen.

Greg L3138, the busy boy from Black Rock, has received QSLs from ZB1CR, UB5WI, HI-8XAA, UO5PK, G6TA, OH2XZ and DL3RK. Hence the few rungs up the DX ladder. Congrats on your appointment to QSL Manager for the Moorabbin Radio Club. For those who are not aware of the fact, this club is the largest of its kind in Australia.

Colin L3188 is an addict to the v.h.f. bands and listens mainly on 2 mx. Try and get that 52 Mc. converter ready for next season as I feel sure that you will enjoy that band very much.

Maurie L3055, owing to studies, has not done any s.w.l'ing for the past three months. He has now caught up with his work and hopes to spend a few hours each week-end at DXing. So maybe next month we shall hear a little of his doings.

Noel L3101: Congrats on your two Popular Electronics awards OM. Could you let me know the score on these awards so as I can impart it to the members who may be interested? On 14 Mc. Noel has heard ZS6, W6, KL7, W0, VP5, JA5, I1BKK and uses an 8JK 20 metre antenna.

QUEENSLAND

Graham L4091: Thanks a lot for the circuits OM. We shall use them at a later date. Graham uses a Hallicrafters rx and is erecting a new antenna at the moment. Lately has heard VEs and South Americans.

Michael L4088: Michael is a member of the local radio club and intends sitting for his ticket early next year. We wish you all the best.

SOUTH AUSTRALIA

Alan L5065: With all that local interference your tally of 117 countries is a pretty good effort. Congrats on your win in the S.W.L.C., very good. I hope the new three element beam is a success. Alan heard recently JT1, XE1, KL7, YS1, G4, FB8, YV5, ZS1, ZS3, KC4, EA3 and UM8.

WESTERN AUSTRALIA

Peter L6021: A glance at the DX ladder will show that this lad is going to give the leaders a challenge. If the wide variety of QSLs and stations received continue, he must eventually reach the top. Peter's present rx is a B28, 12 tubes, his antennae are a half-wave dipole on 20, a half-wave dipole on 40, and the same for 15. For 80 he uses a wire 180 ft. DX heard recently: 7 Mc. c.w., VE3, KV4, CR6, DM3, KZ5, HI3, UP2, MP4, SP6, ON4, G3, DU1 and XE1.

TASMANIA

Mike L7077 (7ZAV), the bug bear of Burnie. Mike has migrated to the north of the Apple Isle, which brings him a bit closer to Australia hi. He intends going off the deep end later this year, and believe it or not his XYL to be is 7ZYL. We wish you all the best in your new venture OM.

I would like to thank those members who took the time to pen me letters, also those for the good wishes re the page, and my recent operation. I trust those who requested, and received copies of the b.f.o. and time chart found them to their liking. Be with you next month chaps. 73, Chas. L2211.

S.W.L. DX LADDER

	Countries Conf.	Countries Hrd.	Zns. Conf.	S.s.b. Conf.	S.s.b. Hrd.	W Stat.
E. Trebilcock	282	289	40	—	—	50
D. Grantley	124	275	38	20	104	35
P. Drew	112	240	31	55	203	29
A. Westcott	93	159	31	9	107	11
M. Hilliard	87	241	33	34	169	12
M. Cox	84	232	30	51	163	21
G. Earl	63	150	28	43	133	7
C. Aberneathy	60	102	32	—	—	14
N. Harrison	54	169	30	19	60	37
I. Thomas	42	139	20	16	97	14
R. Beckley	27	47	19	—	—	—
A. Raftery	14	117	15	—	—	—
R. Oats	9	26	8	—	—	—

Correspondence

Any opinion expressed under this heading is the individual opinion of the writer and does not necessarily coincide with that of the publishers.

S.W.Ls. AND QSLs

Editor "A.R.," Dear Sir,

I have read and studied the letter from VK8KK (June "A.R.") in which he speaks his mind in respect of s.w.l. reports, QSLs and postage!

As an experienced s.w.l., a W.I.A. Inwards QSL Manager, and a QSL Manager for two rare DX stations, I must fully endorse the feelings expressed by our VK8 friend. At the same time I appeal to my fellow s.w.l's.—both at home and overseas—to "stop and think" before submitting your reports.

You should ask yourself "will this report be worthwhile, either for the recipient or for me?" If the answer is "yes," go to great pains to point out the **special** reason why you submit the report. The person at the other end will then be in the position to understand more fully why the report has been submitted (and why you need his QSL!).

I do ask all s.w.l's. wherever you might be to include with your reports some details of what you heard transmitted by the operator concerned. For too long, far too many s.w.l's. have been contented to include bare log details only—overall this is **not** good enough in the minds of **most** transmitting men. You must **prove** that you really did log the signals you are claiming to have heard and the surest way of doing this is to include some "copy" of what the transmitting man (or woman!) transmitted.

—Eric Trebilcock, L3042/BERS195.

COIL FORMERS

Editor "A.R.," Dear Sir,

Reference Harry Major's (WIA-L3102) letter in the March 1964 issue. I agree with him in most of his points raised, as a matter of fact I recently wrote to the R.S.G.B. to ask for, and I obtained, their permission to republish the last two pages of their excellent Handbook as they give all the info. necessary to wind coils on formers which are easily obtainable (as a passing remark, 1d. each from a national advertiser).

Whilst discussing formers, "pill" containers from the chemist in plastic form make excellent formers, and can, if required, be cemented to a valve base for plug-in type or the cap can be secured to the chassis by nut and bolt to push the coil on, and it is easily removable for adjustment or putting another coil in.

Whilst writing to the R.S.G.B. I pointed out the difficulties of Amateurs in other countries in obtaining commercially quoted coils in articles in their publications and the Editor tells me that they now endeavour to get all contributors to give the details of coils used for the benefit of outside U.K. constructors. "A.R." contributors might also take note of this latter remark.

This letter, I hope, will serve as the first lever to get the Editor to consider republishing with due acknowledgments the two pages concerned.

—A. F. W. Haddrell, VK3ZFC.

INFORMATION REQUIRED

C/o. P.O. Sunbury,
Victoria.

Editor "A.R.," Dear Sir,

For some time this Association has conducted a DX programme over stations 3SR and 3UL. This programme has been aimed primarily at providing up-to-date news for the experienced short-wave listener and information of easy-to-log stations for the s.w.l. beginning in the hobby.

It has been decided to include in the programme a regular monthly service feature directed towards the Amateur operator and the s.w.l. interested in the Amateur bands.

It would be appreciated if you could undertake to supply, or put us in touch with, someone who could supply regular monthly information of interest to Amateurs, such as band conditions, call areas being heard on various bands (including 2 and 6 metres), forthcoming Contests, etc., etc.

It is anticipated that this feature will be aired during the first week-end in each month, and your co-operation in making it possible would be greatly appreciated.

—Roy Frost, VK Rep., N.Z. DX R.A. (Inc.)

D X

VP4, OA4, BV, ZM7, 7G1, FP, AC5, MP4, ZC6, TY2

Sub-Editor: H. A. BEHENNA, VK5BB,
14 Stanley Street, Crystal Brook, South Aus.
ADDRESS CORRESPONDENCE FOR THIS PAGE DIRECT TO THE SUB EDITOR

There is very little change to report in the state of the bands this month. Very little activity during the hours of darkness, generally the usual contacts can be had but the real DX stations and rare ones are extremely hard to come by. It's a case of listen, listen, listen if you want to be the one that gets the contacts. Generally the conditions prevailing suit the idle rich or the poor shift worker, hi.

80 Metres: An occasional break through if you are lucky enough to be on hand when it pops. Generally speaking the noise and instability of this band leaves a lot to be desired, i.e. DX-wise.

40 Metres: No change here from last month. G contacts around 0630z are definitely slipping. An occasional South American contact can be had on s.s.b. and the usual run of QRN, Commercial and QRM gets a little bit hard to take. Islands to the north after dark can be heard most nights, but contacts are not very enjoyable under such stress. Activity even towards W has lessened this month.

20 Metres: Very little this month during the morning hours and changes daily, still W and Central America around 0330z onwards, with the skip shifting gradually north through VE to KL7, thence to UA, etc. The only change here is the working of many more stations from the continent of Africa. There are not many on owing to the time factor, but those that are on are of good workable strength. It is no trouble to have a three-continent hook-up with VE, ZS and VK at the one time—0730z. Favourable openings on the long path to Europe can be had at 2300z on some days.

15 Metres: Unchanged from last month. Habits remain same.

10 Metres: Nothing to report.

COUNTRIES AND AREAS WORKED

Self on 14 Mc. s.s.b.: XE2LV, XE1PUN, TG-9RS, VE5FN, VE6SF, VE8RX, UA0KIF, W4-5-6, ZS2RM, ZS6AOW, ZE1JE, JA1AHX, VR4EG, K7WKW, etc.

Ken VK3TL reports that short path to Europe has just about closed even if you wait up till the late evening. However, long path in the mornings is coming good to Europe. On 15 metres there have been several openings to the States during the daylight hours. Ken has worked on 14 Mc. s.s.b.: VP6KL, 6Y5MJ, ZS2RM, GM2FHH, WA4JXV/VO2; 14 Mc. c.w.: 5R8AI, FB8WW (Crozet), WA4JXV/VO2; 21 Mc. c.w.: WN4PLY, WN4PXP. Best QSLs: OX3JV, VP7CC, VE8RN (Zone 2), VP8GQ (Sth. Orkneys), VQ1GDW, YA1AN, 5Z4AO, 9K2AN, 9A1AIJ, 9A1CWN, SL2AD. Tnx Ken.

Garry VK5ZK reports a quiet month, but has worked the following: 14 Mc. s.s.b. FG7XV (0515), TI2JIC, HC8FN, UA3CR, UA3FU, XE-1AZ, XE1MO, JA0RM, G3ENZ, TG9RJ and many Ws. 21 Mc. a.m.: W3-4-5-6-7-8-9-0, but band poor in VK5. Tnx Garry.

Peter Drew, L6021, from VK6, reports hearing the following on 7 Mc. c.w.: VR1B, G3PFZ, VS1FZ, ON4JB, DU1TA, VE3BLU, F9NF, KH-6EWA, JA1CSX, JA2DCN, 9M2DW, SP6ALD, DJ1FC, CT1DJ, SP6AEG, UP2KDA, CR6JL, DM3RM, CR6AI, ZS5WP, I1RIF, UA9RO, KV-4CI, VE3EPR, XE1FFF, UT5HT, DM3VMJ, VS1LJ, OR4VN, FB8YY, YU3BNZ, PA0MPR, DJ5PA, SP8CP, VP6KL, G3KSH, EL2AD, HA-1KSA, EL0B/MM, SP6AWB, UT5BP, YO8FR, VQ2DT, OH1AD/0, YV5BDK, LA5HE, VS1LU, DJ7AU, LZ1SP, OK1FE, LZ1DZ, UA9VB, DL-7AA, UB5KBR, SP3ART, YO3SC/MM, UA1DS, YV5BMY, UB5FK, 9M2LO, G3OLS, SM4CAN, SM7TT, SM7DGA, OK3KBM, SP3KET, UA3-KAB, UB5ZB. 14 Mc. c.w.: JA7NI, ZS5QU, KL7DPF, FR7ZD, FB8WW, VU2LN, KR6HJ, UJ8AH, VQ8AM, VS1JW, 9M2YY, BY1PK, VQ2IE, DU6TY. 14 Mc. s.s.b.: KC6AA, ZS2RM, ZS6CR, KL7PI, KL7BJW, JA3AJF, ZS4U, ZS-6ANE, YV1II, UL7FA, HK5EV, VP9EV, OZ5ZU, VE3XK, 4U1ITU, OH2NB, HK3AFB, TI2CMF, HS1BD, HI8CLU, VS9MG, KG6NAA, VE7AIE, ZS6OS, VE6RJ, W0PI/KM6, VQ8BFC, ZS3HT, CR7GF, VE7ZM, DU7SV, ZS1JA, WB6BZS/KJ6, CR9AH, JT1CA, VU2NR, ZS5KI, XE2VY, ZS-6NE, ZS6AJ, VE7PV, KC6BO, HM5BF, VQ2JC, VQ2RB, ZD6PBD, 9Q5AB. Tnx Peter.

VS9MG, Maldaive Islands, can be heard on approximately 14120 kc. on most Saturday mornings 0130z with s.s.b. signals, sometimes works with VS9MB who runs very low power, also on s.s.b.

Olaf KL7QDQ reported transferred to the Aleutian Islands.

Stan KC6BC on the island of Panape, East Carolines, can be heard calling CQ around 0930z on 14 Mc. s.s.b. if you need this one.

VR4EE and XYL VR4CM are using a Swan from their QTH in the Solomons, which at the moment is powered by batteries.

John VK8JI reports that activity in VK8 very quiet with DX very inconsistent at Darwin. He will also be in VK3 permanently as from September and hopes to be on s.s.b. soon after that date.

VK9CS heard working W with good signal during the afternoons.

CR7GM can be heard calling CQ on s.s.b. approx. 14110 kc 0600z, but if no answer he then looks for the missing States for completion of his W.A.S.

A certain VE station complained bitterly to me about the commercial and associated QRM on 14147 kc., said that far too many were occupying our bands so he shunned the frequency for four days. QRM on the fourth day got the better of him so he decided to investigate and found to his horror it was FB8WW and the pile-up.

JA1ACX and friend on 7.1 nightly on s.s.b., but apparently cannot converse in English, both have good signals.

W stations are copiable here all through the daylight hours, but are only workable for about 4-5 hours daily because of QRM on 14 Mc.

News is requested by lots of DX stations re the hours of operation of Chatham and Campbell Islands. Anyone help?

If you are listening intently on 14 Mc. and hear a series of clicks and tinkles, rumour has it that it comes from some scanning device in Antarctica.

Group of DU stations on a.m. 7045 kc. headed by DU1RS can be heard chatting away nightly and includes DU1, DU6, DU9.

Colin VR4CB and charming XYL Bessie should by now have arrived in VK. They will be visiting most States. They are due at this QTH on 25th July. Welcome from all VK friends. For those interested, Anzac, the pooch, will be left in Gaudalcanal to carry on his life of vice.

VK6GU heard working VK0GS on 7080 kc. around 0900z.

Reported that an OA4 bobbed up on 3.5 Mc. a few nights on s.s.b., but not heard here unfortunately.

Steve ex-VK0VK would like anyone who hears any DX querying the non arrival of his card to pass on the information that he has now settled down and attending to the despatch of as many cards as soon as possible.

ZS2MI on s.s.b. around 0630z, approximately 14103 kc. Signal not always strong, but quite workable.

K7WKW, Salt Lake City, Utah, is a ready starter for QSL from this State. Anyone who needs Utah will find him on approx. 14260 kc. most days.

YA4A is the call sign for Dick K4UTE, who expects to operate for at least ten months from Afganistan.—VK5RX.

WN4QKP, of Miami, who operates mostly on c.w., is the son of W4EMB. He is 7.

JT1KAA, of Ulan Bator, in Mongolia, is on s.s.b. You will find him on 14103 kc. Mondays, Thursdays and Sundays from 0000z.

ZD9AM is transferring to Marion Island for a period of 12 months. S.s.b. with Collins equipment.

OH0NC at Aland Islands is reported active at 0130z, frequency is 14285 kc.

VS9OC, of Oman, reported active on 7010 kc.

ZS9A is active from Bechuanaland with a 50-watt rig. He hopes to stay one year.

QTH CORNER

Note.—Name of country must follow these addresses:—

CE2BD—Oscar Araya, Independencia 581, Ovalle.
CN8CQ—Andre Haubert, 41 Rue de la, Republique, Rabat.
JA1ACW—H. Oshio, 496 Yokohiba, Sanbu, Chiba.
LU1RA—Eduardo E. Idigorus, Oconuija, Catamarca.
YV5AWP—Dagaberto A. Romer, Jnr., P.O. Box 406, Caracas, Ven.
ZB2U—W. Hooper, 2 Lighthouse Qrtrs., Europa Point, Gib.
ZS2AR—H. P. Bakkes, 24 Komani St., Queenstown, C.P.
ZD1AW—Alf Wilson, Lungri Airport, Freetown.
4S7BR—B. D. Rampala, "C" Bungalow, C.G.R. Wrkshps., Ratmalana, Mt. Lavinia.
5A1TA—Charles S. Patterson, P.O. Box 385, Tripoli.
4X4FM—Haim Lieberman, 49-7 Shekhunat Shimshom, Askelon.
3A2CX—Max Bouteleux, 49 Reu Grimaldi, Mon.
ZS7S—G. B. Stones, Schoch St., Mbabane S.
SM3CYR—Alf Regnander, Prestgatan 4-b, Ostersund.
GI3CM—J. Patton, 11 Barmont Crescent, Belfast 4.
PJ2CA—Sybren Reitsma, Dam 2, Juliana Dorp., Curacao.
VE8RG—Thomas Rait, C/o. Fed. El. Corp., P.O. Box 2330, Edmonton, Alb.
G2ARP—R. Spivey, 53 Maybury, Maybury Rd., Hull, Yorks.
F2DS—Serge Siebert, 22 Rue de Philippeville, Reims, Marne.
CR5AC—Anibal Do q.b., Vincente, Bissau.
CX4JY—Mauricio S. Ribas, Amorin 1142, Salto, Salto.
CE1FW—Ismael Nunez, Casilla 192, Copiaco, C.
9G1YL—Ruth Kaiser, P.O. Box 1981, Kumasi, G.

SIGNALS ON 20 METRES

If you work exclusively on this band and continually work DX, it might be a good idea for some to get a local check on their signals sometimes. These remarks are advice in a friendly way, that some signals are not what the operator thinks he is transmitting, especially s.s.b. The writer fell into this unhappy situation once, always with the same stations, and we became very good friends with skeds in almost every State of U.S.A. Eventually came a report, followed by another, then one said it's been going off for weeks. Finish up, I wrecked the tx. Let's take time off and get that check every three or four days at least. The DX will still be there afterwards.

In this edition thanks to Peter Drew, George VK5RX, Garry VK5ZK, last but not least, Ken VK3TL. 73, Bert VK5BB.

☆

MEET DL3ZI

MANFRED STAAR
42 Oberhausen, Flockenfeld 82, Germany

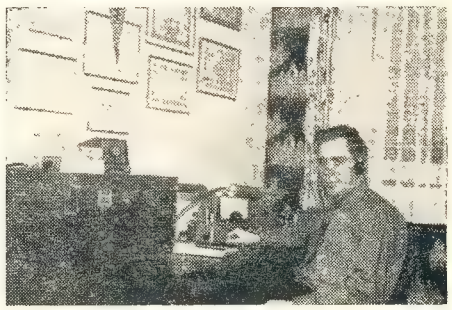

Fred, owner and operator of DL3ZI, is aged 34. He has one boy aged six years, one daughter aged six months. His favourite pasttime is learning electronics. He is employed as a fireman in the fireguard at Oberhausen, the coal centre of Germany.

His first QSO was in 1950. He uses an AR88 receiver and the transmitter is a Geloso v.f.o., frequency doubler, 814 in the final and runs 150 watts input. His electronic key is home-made. For local contacts he uses a screen grid modulator. A mosley TA33 squirts the r.f. in the required direction from only roof high.

Fred has 280 countries worked and 275 confirmed. His certificates include W.A.E.1, W.A.A., W.A.S., D.L.D.500, D.X.C.C., etc. He is an avid stamp collector who also likes to collect various radio club badges. An Amateur with a good sense of humour, as you will see after you work him and receive his QSL card.—Bert VK5BB.

YOUTH RADIO CLUBS

This was a big month—three of my four readers wrote to me and 5PS spoke to me three times in his notes!

Keith 2AKX kindly sent me some further details of the Booragul personalities. The most interesting is Susan Brown 2BSB, first schoolgirl A.O.C.P. and first of the new VK2-B call signs. We have given some news of Susan a couple of months ago, but she is now on the air (only one hour a week until after Leaving Certificate!—usually Saturday), so if you contact VK2BSB, she receives c.w. at 18 w.p.m.

Another Booragul type is Jan Oosterveen, VK2BJO, now working with P.M.G. and working 80 mx. From the same area is Ross Beckley, VK2ZJB, not yet on the air but doing c.w. test soon for full licence.

Keith has a small class (at his new Westlakes Radio Club) on Saturdays, doing Y.R.C. certificates and a class of 14 on Wednesday nights doing A.O.C.P. Busy man! We could do with many more like you. I repeat a special question for the Newcastle boys (asked some time back) "How many Youth Radio Clubs in such a large centre?"

I have already congratulated VK5 Division for the appointment of Bob 5OD as Y.R.C. Supervisor. As I am fond of asking questions, I ask another one: "What steps are being taken by the Division organisation to help Bob?" News is eagerly awaited. It is pleasant to hear that Port Pirie Y.R.C. is even more active than ever.

Ken 3TL was regular as ever with his Newsletter containing some interesting news items. The Institute for the Blind at Burwood have not been forgotten. Ken himself went portable, John 3PZ had the boys work mobile from his car and Club Instructor Bruce Whitehead set up a temporary 80 mx antenna. . . . Eric Snibson, instructor of Caulfield Grammar Club, has managed some donated equipment from parents. A membership fee of 5/- per term has been fixed. What do club leaders think? Does anybody appreciate something they get for nothing? . . . Barbara Knight and Joy Byatt report that St. Anne's C.E.G.S. have had a few lectures from a R.A.A.F. officer stationed at Sale. . . . Michael Gurry, secretary of the Bundoora Radio Club, reports club activity in building amplifiers and small receivers. The club has the loan of a s.w. receiver and there is much logging of Amateurs. . . . The best news of all is from Robin Rowlands of the Scotch College Club. Two more of their members have qualified for Limited A.O.C.P. (What about some names and details, Robin?). Plans are being made for a 10-element yagi on the roof of the Physics Lab.

When I talk of help from a Division organisation, I don't necessarily mean that the Council go out into the field. They already put some of their valuable spare time into administration. But VK2 Council have recently done more than their share. Division President Vic 2VL, Y.R.S. Supervisor Rex 2YA, and Education Officer Harold 2AAH co-operated to instal equipment at Cronulla High School Science Exhibition and demonstrated mobile to base communication, to the great interest of all visitors. Division Vice-President Ivan 2AIM demonstrated an Amateur Radio tx to 30 members of Parramatta Congregational Men's Association and gave them a talk on the history of the Amateur Radio Service and its present day status. In fact, Harold invites organisations in VK2 to write to him and he will arrange talks and demonstrations. 73, 1KM.

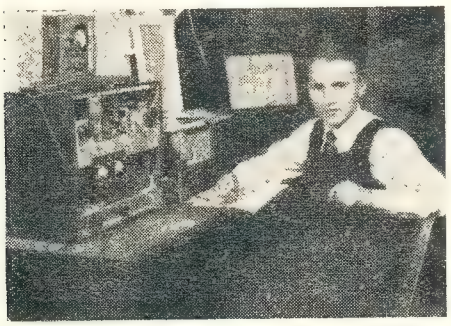

VK2BSB, SUSAN BROWN

Fifth year at Booragul High—maths.-physics-chemistry type, but also Honours English—prefect, house captain—won Sulphide Corporation scholarship—allocates one hour per week to radio because exams. near for Leaving Certificate, 10 minutes for call-back to VK2AWX (Hunter Branch) and 50 for chats on Saturday—transmitter is 10w. with Eddystone receiver—member of Keith 2AKX's Westlakes Club at Teralba—has driving licence (age 17)—keen interest in mechanised things—receives c.w. at 18 w.p.m.—studied radio for 2½ years.

ELEMENTARY CERTIFICATES ISSUED

Shown above are members of the A.P.I. Radio Club, in conjunction with the W.I.A. Y.R.C. scheme, receiving the first Elementary Certificates issued in Victoria.

Left to right: Mr. George Munro (Divisional Engineer, P.M.G. Training School, Vic.), David James, Peter O'Neil, Tony Newman, Richard Philp, John Liversey, Fred Mackrewicy, John Newman and Club Instructor, David Buck (VK3ZMX).

Richard Philp has since passed L.A.O.C.P. and is now VK3ZRP.

Johannesburg Festival Award

This award is available to all Amateurs who have contacted the required number of Johannesburg stations during the festival period July-October, 1964. This award—considered to be the most attractive one produced for a long time—is descriptive in design and presented on the inside of a folded card. It tells the story of the phenomenal growth of Johannesburg in story and colour illustrations.

DX stations (except zone 38) must contact five Johannesburg stations. Zone 38 stations (except ZS6) must contact 10 Johannesburg stations. ZS6 stations must contact 20 Johannesburg stations.

Phone, s.s.b. a.m. or mixed contacts with a minimum report RS 33 or RST 338 will be allowed.

Send a certified list (No QSL cards) to the Awards Manager, P.O. Box 7227, Johannesburg, Republic of South Africa. There is no charge.

S.w.l's can also qualify and are required to send a certified list of the required number of stations heard as provided in the rules above.

— · · · —

SOME TRANSISTORS CARRY 600% DUTY

CANBERRA.—Tariff duties on some imported transistors was as high as 600%, a member of the Tariff Board (Mr. R. Boyer) said recently.

Mr. Boyer, in a Tariff Board report, criticised the present method of imposing duties on them. But the Board decided by a majority decision to retain the present duties unchanged.

They provide for a duty of 2/6 British preferential and 3/9 most favoured nation rate, or 27½% and 45%, whichever returns the higher duty.

"Unreasonable"

In his dissenting opinion, Mr. Boyer said that in some cases these rates meant a duty of 3/9 was applied on a transistor valued at only 7d. He said this was unreasonable.

Mr. Boyer said that if efficient Australian producers in fact needed such protection against foreign suppliers, the local industry was clearly uneconomic.

The Board rejected an application by local manufacturers for an increase in duties.

—Brisbane "Courier Mail," 26/6/64.

VU2/4S7 DX CONTEST 1964

The Amateur Radio Society of India and the Radio Society of Ceylon invite Amateur Radio Stations in all parts of the world to participate in the first VU2/4S7 DX Contest. The object of this Contest is to enable DX stations to work as many VU2 and 4S7 stations as possible during the two week-ends.

The Contest periods are: Telephony—October 10-11; c.w.—October 17-18. The commencing time in each instance is 0600 G.M.T. Saturday, and the finishing time 0600 G.M.T. Sunday.

There are three main sections to the Contest: (a) Transmitting telephony, (b) Transmitting c.w., (c) S.w.l.—telephony and c.w.

All Amateur frequency bands may be used. The serial number will comprise RS or RST report plus three figures, which may begin with 001 for the first contact, and which will increase in value by one for each successive contact. If any contestant reaches 999, he will start again with 001.

Scoring: For DX stations—Two points for each contact on a specified band with VU2/4S7 stations and 1 point for each contact on a specific band with the rest of the world.

For this Contest, the A.R.R.L. Countries List will be used with the exception that each Call Area of W/K, JA, SM, UA, VK, ZL, etc., will count as "countries" for scoring purposes.

Logs, DX Stations: (a) Logs should contain date, time (G.M.T.), call signs of stations contacted, band, serial numbers sent, serial numbers received, and points. Different logs must be used for each band. (b) The summary sheet should show call sign, name (block letters), and address, details of equipment, total score by showing total points for all bands. Sign the declaration that rules and regulations were observed.

Logs and accompanying summary sheets should be sent to **A.R.S.I. Contest Committee, Post Box 534, New Delhi-1, India,** and should be postmarked not later than Nov. 15, 1964.

Awards: Certificates will be awarded to each country (call areas in VK) on the following basis: (a) top scorer using all bands, (b) top scorer using one band, (c) to those with minimum contact requirements, to be determined by conditions and activity prevailing.

There is an S.w.l. Section which is open to all members of any s.w.l. society in the world. The rules are the same as for the transmitting section. To count for points, logs will take the same form as for the transmitting section and should contain date, time (G.M.T.), call of station heard, serial number sent by the station heard, band and points claimed. Scoring is on the same basis as for transmitting and the summary sheet should be similarly set out. Certificates will be awarded in each DX scoring area.

DX stations may log only VU2/4S7 stations.

Phone 34-6539, write or call

WILLIAM **WILLIS** & Co. Pty. Ltd.

428 Elizabeth St., Melbourne

for GELOSO

Equipment and Components

S.S.B. CRYSTAL FILTERS

For cost-saving, NOT gold-plated. Now available anywhere within 25 Kc. between 3800 and 6400 Kc. Optional bandwidth, min. 2 Kc., max. 5 Kc., state what is wanted. In octal base plug-in units, with circuit instructions and THREE matched carrier xtals.

Price: £7-10-0 Set

Sideband Electronics Engineering (Arie Bles)

33 PLATEAU RD., SPRINGWOOD, N.S.W. Phone 394

VHF

50 – 144 – 420 – 576 – 1296 Mc.

Sub Editor: LEN POYNTER, VK3ZGP.
14 Esther Court, Fawkner, N.15, Victoria
ADDRESS CORRESPONDENCE FOR THIS PAGE DIRECT TO THE SUB EDITOR

Winter and its effect on activity is painfully apparent here in VK this year. So far there has been no reports of 6 mx DX up to early July. Whether the level of activity has lost the usual enthusiasts or Channel 0 has covered up the band is not yet known. However, from all reports this t.v. signal is reaching out in all directions. From Perth to Wellington from Prosperine to who knows where.

Across the other side of the world comes reports of real space age DX. Moonbounce contacts between OH1NL in Finland and W6DNG on 144 Mc. After eight years of effort, a two-way contact was made in May of this year. Then further news, that KP4BPZ, with the help of a 1000 ft. dish, worked W1FZJ on 144 and 432 Mc. a.m. There are further reports of contacts to DL on 144 and G on 432. David VK3QV was in W land at this time but unfortunately was unable to be around at the right place at the right time. David had eyeball QSOs with quite a few v.h.f. personalities during his trip to W and G land. Spent some time with Sam W1FZJ, visited W1AW and A.R.R.L. Hdq. In the U.K. appeared on a.t.v. via G3NOX/T near Cambridge, the co-holder of the European 1296 record (150 miles to F3) and saw and heard the v.h.f. activity in both W and UK. Hope to have more news on these Moonbounce episodes for a later issue.

Here in VK, awaiting the Oscar project to go into orbit—wonder how far we will work in VK? 73, 3ZGP.

VICTORIA

The v.h.f. bands in VK3 have been very quiet of late. The only real activity on 6 metres being Channel 0. Ted 3UU and Doug 3ZJJ have just built gear and are ready to log a few contacts. Two metres has been fairly inactive. Trev 3ZIJ, ex Yarrawonga, has moved to Melbourne and Col 6ZCI has also.

The VK3 V.h.f. Group are planning a beacon on 2 metres. The proposed frequency is 145.00 Mc. Any VK Division having suggestions for or against the beacon or its frequency are asked to write to the VK3 V.h.f. Group Secretary, Peter 3APJ.

432 Mc. has been very active and there are now about 26 stations operating on this band.

Mt. Gambier V.h.f. Convention: Approx. 36 Hams from VK3, some with XYLs and harmonics, attended the Convention which was a big success, and is the first of many the VK5 S.E. V.h.f. Group hope to have. A very good time was had by all who attended. (See photograph on this page taken at Mt. Gambier.) 73, Cyril 3ZCK.

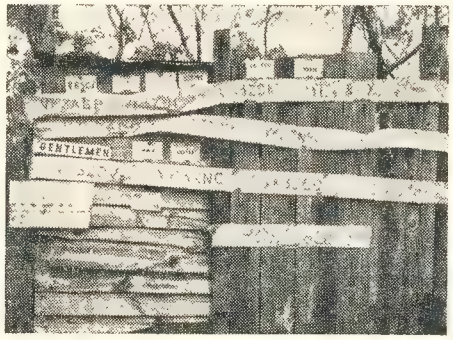

Seen at V.h.f. Convention at Mt. Gambier.

QUEENSLAND

50 Mc.: 4ZRC had a very fine week-end in Toowoomba recently. Using his flea-power mobile, he worked four of the Brisbane stations. John 4PU and John 4ZES, both of Woombye, have been working into Brisbane regularly during the past few weeks. George 4ZLG has finally put his new bird-perch up and even the kookaburras are airsick by the time they reach the 6 mx beam. Roy 4ZRM and Royce 4ZRH also have new towers.

It goes without saying that the boys with the towers have been working into Lismore—Harry 2AWH and Ted 2ZFS are regulars. Bill L4001 tells me that many of the Ipswich s.w.l's are building 6 mx converters and already QSL cards have been sent from Ipswich to the Brisbane boys.

A party from the Ipswich Amateur Radio Club visited George 4ZLG and Ray 4ZRM and it seems that Norm 4KO has bought a kit of parts for a 6 mx tx and Bob 4LI is also interested in the v.h.f. bands.

144 Mc.: John 4RZ is keeping us in touch with developments of Oscar III. He is compiling a list of stations likely to be looking for Oscar and so far has the names of 18 VK4 stations. Two call signs appeared this month (June) that have been quiet for a while. Bruce 4ZCM, working from Clontarf, and Ross 4ZAT, from Moreton Island. QSB has been noticed on Ross' signal even though he is only about five miles away, but this five miles is all over water.

General: The monthly meeting of the V.h.f. Group was held on Friday, 19th June, and Mr. G. Kirkegarde, of the P.M.G. Dept., gave a talk on Interference in Radio Communications. Although the attendance was down to what it usually is, those present enjoyed an informal lecture and the usual refreshments afterwards.

Any of the v.h.f'ers who are expecting QSL cards and who do not attend meetings are asked to get in touch with Tom 4ZAL and by posting a few stamps to him, he will be happy to return cards to you.

What is Des 4ZJR doing with the four QQE06/40s he owns?

Predictions: With a little effort on their own behalf and supreme bulldozing effort on the part of others, precipitated by a severe psychological attack to shock the same nerves into action, we confidently predict a smoke test from Wayne 4ZBN, Colin 4ZHC, Barry 4ZMB and Ross 4ZRD in the near future! (With apologies to the Bundaberg Amateur Radio Club.)

George 4ZLG wishes me to advise that he and his XYL Joan will be going on holidays in November. They will be leaving Brisbane on 7th and returning on 26th. (George tells me he is booked on the ferry over to Tasmania on 9/11/64 returning on 24/11/64.) George hopes to be running 8-10 watts from his mobile and will be going to VK7 land via VK2 and VK3. He will be calling CQ all the way and hopes to work many of his old friends. 73, 4ZPL.

NEW CALL SIGNS

APRIL 1964

VK1JR—J. R. Watson, 64 Swinden St., Downer, A.C.T.
VK2GM—R. Hookway, 78 Campbell Hill Rd., Chester Hill.
VK2ADD—D. C. Reynolds, 13a Yarra Drive, R.A.N.A.S., Nowra.
VK2AMG—L. R. Burston, 51 Ellery Pde., Seaforth.
VK2AMI—F. J. Carey, 142 Seville St., Fairfield.
VK2ATQ—Chrstian Brothers College Radio Club, Crown Lane, Wollongong.
VK2AXK—D. L. Kinsella (Rev. Bro.), Christian Brothers' College, Crown Lane, Wollongong.
VK2AYI—S. Clark, 11 Stewart St., Arncliffe.
VK2AYQ—Yass Amateur Radio Club, Station: 23 Pettit St., Yass; Postal: Pritchett St., Yass.
VK2AZQ—M. D. Legg, "Wirringulla," Bronia Rd., Bullaburra.
VK2ZIA—I. P. Cork, "Glen View," Wollombi, via Armidale.
VK2ZKB—R. K. Beckley, 102 Pacific Highway, Belmont North.
VK2ZKT—K. A. Thomson, Avondale College, Cooranbong.
VK2ZLM/T—L. O. May, 36 Tasker Ave., Campsie South.
VK2ZMA—I. A. Morris, 11 Felton St., Dundas.
VK2ZPD—P. K. Doman, 16 Wingello Rd., Miranda.
VK2ZPT—P. J. Lockley, 670 Pennant Hills Rd., West Pennant Hills.
VK2ZSB—S. A. Brunette, 67 Bungan Head Rd., Newport Beach.
VK3US—R. S. Clarkson, 26 Stewart St., Brunswick, N.10.
VK3AHF—Robert (Tex) Morton, Portable, C/o. Victorian Showmen's Guild, 108 Queensberry St., North Melbourne.
VK3ARG—R. G. Foord, 598 Thompson's Rd., Norlane, Geelong.
VK3AWL—J. P. Hunter, "Brooklyn Hostel," Millers Rd., Draytonville.
VK3AZW—T. E. Woolley, Flat 3, 27 Southey St., Elwood.
VK3ZBB—W. I. B. De Mel, 98 Gatehouse St., Parkville.
VK3ZBR—B. D. Yeoman, 6 Bank St., Ascot Vale.
VK3ZKW—I. J. Battersby, 1 Irving St., Mt. Waverley.
VK3ZTR—T. R. Chappel, 100 Coronation St., West Footscray.
VK4FK—G. W. Fox, 102 Wandal Rd., Rockhampton.
VK4RP—Clontarf Beach High School Radio Club, King St., Clontarf Beach.
VK4UC—C. T. Taylor, 68 Georgina St., Woody Point.
VK4VQ—E. V. Avenell, Bray Rd., Lawnton.
VK4XY—G. G. Down, 57 Gearside St., Everton Park.
VK4ZJA—D. W. Asmussen, 2 Raffles St., Mt. Gravatt.
VK4ZKC—K. Chiverton, 17 Fairmeadows Rd., Nambour.
VK4ZMB—B. J. Mayfield, 14 Charlton St., Ascot.
VK5WD—J. D. Ward, Flat 2, 102 Partridge St., Glenelg.
VK5ZDM—D. M. Roberts, 15 Daws Rd., Mitchell Park.
VK5ZMH—I. W. Cowan, 25 Nitschke St., Elizabeth Grove.
VK5ZNH—R. E. Burns, 5 Orchard Court, Newton.
VK5ZPW—W. B. Pywell, 17 Swaine Ave., Rose Park.
VK5ZRC—I. R. Cooper, Saltash Ave., Christies Beach.
VK5ZTS—E. T. Schoell, 33 Avenue Rd., Highgate.
VK6ZBB—W. E. Olsen, 8 Margaret St., Ashfield.
VK6ZEE—W. G. Wylks, 22 Margaret St., Cottesloe.
VK6ZED—R. B. Pemberton, 239 Jersey St., Wembley.
VK6ZEG—W. R. Godley, 69 Armadale Rd., Rivervale.
VK6ZEP—P. C. Pemberton, 239 Jersey St., Wembley.
VK6ZEW—Wesley College Radio Club, Coode St., South Perth.
VK9JK—J. A. Knoebel (Father), Catholic Mission of the Holy Trinity, Mt. Hagen.
VK9HS—N. E. Parsons, Portable, C/o. Ansett M.A.L., P.O. Box 278, Lae.
VK9OM—O. D. F. McCutcheon (Rev.), 12 Coronation Drive, Lae.
VK9WP—W. A. P. Luke, C/o. Radio Station, Nauru.
VK9RW—R. A. C. Washington, Vanimo, T.P. N.G.

ERRATA

Readers are asked to note the following corrections (owing to incorrect copy supplied to this magazine) to Call Signs previously published.

In the January list (published May "A.R.") VK3ZAV should be VK3ZAU. Also VK4ZLI should read VK4ZJL.

In the February list (June "A.R.") VK2GF should read VK2ZGF.

☆

AMERICAN CALL-BOOK

The Federal Treasurer W.I.A. has for sale at £1 post paid recent back numbers of "Call-Book Magazine". These, at less than half price, have been used by Federal Officers and most are in new condition. Apply Bob Boase, VK3NI, 50 Cardigan St., Carlton, Vic. Only the edition listing American Amateurs are available at present.

DURALUMIN, ALUMINIUM ALLOY TUBING

IDEAL FOR BEAM AERIALS AND T.V.

★ LIGHT ★ STRONG ★ NON-CORROSIVE

STOCKS NOW AVAILABLE FOR IMMEDIATE DELIVERY

ALL DIAMETERS—¼" TO 3"

Price List on Request

STOCKISTS OF SHEETS—ALL SIZES AND GAUGES

GUNNERSEN ALLEN METALS PTY. LTD.

SALMON STREET,
PORT MELBOURNE, VIC.
Phone: 64-3351 (10 lines)
Telegrams: "Metals," Melb.

ADELAIDE GAM MELBOURNE

HANSON ROAD,
WINGFIELD, S.A.
Phone: 45-6021 (4 lines)
Telegrams: "Metals," Adel.

CHOOSE THE BEST—IT COSTS NO MORE

RESIN CORE SOLDERS
for reliable connections

G. T. LEMPRIERE & CO. LIMITED. Head Office: 27-41 Bowden Street, Alexandria, N.S.W.
and at Melbourne • Brisbane • Adelaide • Perth

POSTMASTER-GENERAL'S DEPARTMENT

has vacancies in Victoria for

RADIO TECHNICIANS

Required for operation, maintenance and installation work at the following locations:—

★ National Transmitting Stations 3LO-3AR Melbourne and 3GI Sale.
★ National Broadcasting Studios, Melbourne.
★ National Television Stations at Country Areas.

Qualifications: Applicants should possess a good theoretical knowledge of Electronics combined with practical experience.

Conditions: Good opportunities to obtain permanent employment and promotion. Excellent working conditions and amenities including paid sick leave and annual leave.

Salaries: Award rates and where applicable overtime and penalty rates.

Apply personally or by letter to:—

The Staff Employment Officer,
Lower Ground Floor,
250 Flinders Street, Melbourne.
Telephone: 60-4491.

LOW DRIFT CRYSTALS

FOR

AMATEUR BANDS

ACCURACY 0.02% OF STATED FREQUENCY

3.5 and 7 Mc.
Unmounted, £2/10/0
Mounted, £3/0/0

12.5 and 14 Mc.
Fundamental Crystals, "Low Drift,"
Mounted only, £5.

THESE PRICES DO NOT INCLUDE SALES TAX.

Spot Frequency Crystals Prices on Application.

Regrinds £1/10/0

MAXWELL HOWDEN

15 CLAREMONT CRES., CANTERBURY, E.7, VICTORIA

THE NEW "A.R."

LOG BOOK

IS NOW AVAILABLE

Larger, spiral-bound pages with more writing space.

Price 7'6 each
including Postage

Obtainable from your Divisional Secretary, or W.I.A., P.O. Box 36, East Melbourne, C.2, Victoria.

FEDERAL AND DIVISIONAL MONTHLY NEWS REPORTS

(SEND CORRESPONDENCE DIRECT TO DIVISIONAL REPORTER NAMED AT PARA. END)

FEDERAL QSL BUREAU

Full rules and log proformas for the 10th European DX Contest may be had from this Bureau. Contest periods are: c.w., 0000z, 8th Aug., to 2400z, 9th Aug.; phone, 0000z, 15th Aug., to 2400z, 16th Aug.

Stan VK3AWX is now acting as QSL Manager for John, VK4JQ. Stan replaces W6HYG.

Cards from PK2ET are coming to hand via the D.A.R.C. These indicate that the operator is or was Johnny DJ4IC and the QTH given is Solo, Java. QSLs must go ONLY via DJ5QK direct or via D.A.R.C. PK2ET has not been heard since April last.

Al Scarlett, W2CC, has returned to his home QTH after a trip to England and all Scandinavia. Al enjoyed the trip despite continued wet and cold weather and has resumed his skedding with VKs 2OJ, 3HL, 3RJ, 3XB and 5BO.

—Ray Jones, VK3RJ, Manager.

— • • • —

NEW SOUTH WALES

HUNTER BRANCH

Winter draws on, as one of our members was heard to remark at the last meeting and since some are not so well equipped for the icy blast, the attendance was below the usual number. However, there were 28 members, associates and visitors present to hear and see a variety of items of wonder and delight. As you may have heard, Lionel 2CS was smitten with the dreaded wog and was unable to give his proposed lecture on the crystal locked converter. There were some items of equipment for auction and your scribe dispensed with this section of the proceedings, Gordon being absent. Those who partook were delighted with the bargains they took away and one, Tom Davis, has said that at the next meeting he will offer for sale some of his surplus gear. Those familiar with Tom's vast stock of bits and pieces will know to expect a really super auction night next meeting. The July gathering continued until 10.30, there having been discussed various topics including broadcast transmitter aerials, transistor television and computers, the latter topic being ably treated by Tony 2ZCT.

The absence of several of our members was due to sickness of one or both parents, and to those who are so distressed, go the best wishes of us all.

Of course the wog aforementioned has stricken the most hardy of us and when Frank 2APO lies abed for days, things are really at a low ebb. To add to his discomfort came the publication of a certain feature article in the local daily. Our confederates in G land would dub it a real smasher, and it was! The type of newspaper comment that makes everyone both laugh and learn at the same time, indicates journalistic skill of the highest order and congratulations go to YL Jennifer for her splendid effort.

Jan, who because of his name, is sometimes mistaken for someone else, and has at last received his new call. He has made an excellent start signing 2BJO from Awaba at week-ends on phone, and from Sydney during the week on c.w. Susan 2BSB, Jan's contemporary in Amateur Radio, still radiates a good signal on 160 although the monitor doesn't always say so.

Three of our local members are going about their everyday tasks with an expectant look—waiting for the results of the July exam. So as not to make their suffering any greater, I'll refrain from giving the finer details until the notification arrives.

The broadcast from 2AWX always includes some DX news and a recent test indicated that nobody listens to this section. If this statement leaves you wondering, listen again—but carefully this time.

Many of the local boys are preparing their rigs and stocking up on extra coffee for the R.D. Contest. Remember it's less than a fortnight away and every log submitted gives VK2 a bit more chance, so why not give some of the high scorers a fright by coming in first, unpredicted. Jim 2AHT doesn't mind some opposition and every point helps. The wild Irish rose from Toronto had better put up a good showing now that he's set the standard with the AXU string aerial and the bucket of bolts. Fancy a better signal report than those with scientific rigs and 100 per cent. modulation! But still he cannot circumvent the man with the bow tie bird perch, complete with traps. For those uninitiated, this is Bill 2ZL, who now goes as well on 80 as he previously did on 40.

At Westlakes, the boys have been digging in to the work and the buried coax is in place with fancy termination boxes at the output ends. Due to the good properties of the earth at the club, it may happen that 2AWX broadcasts could originate from there in the future. Much depends on the successful erection of the vertical for 160. However, somnambulists beware! There are many trip wires laid in strategic places around the club house.

The annual hibernation is in progress at Cessnock and nothing will be heard from there until the spring, at least. There was a rumour that Chris was to use an old starter motor to swing the beam—but where is the beam? In all honesty, the lads from the coaly city are kept pretty busy with the Civil Defence activities for which they are to be commended.

It was expected that there would be a 160 mobile signal on from hereabouts, but due to an inversion of the power source, this is now a remote dream. The morse classes at the club are still progressing very satisfactorily and the boys should pass the c.w. in January if nothing else.

Details of the dinner and field day for this year are to be published next month. Members will be pleased to learn that, contrary to accepted practice, costs will be lower this time than last. Also there will be a further saving for those who book early, but more of this next time.

Remember the next meeting when Lionel will talk about the converter and tuneable i.f. receiver which was planned for July. We will be present in room 6 (or room 15) classroom block, Newcastle Technical College on Friday, 7th August, at 8 p.m. Don't forget the auction—it promises to be a beauty. So see you there. 73, 2AKX.

CENTRAL COAST ZONE

Major 2RU's lecture on "Receiver Alignment and Servicing" at the June meeting of the Gosford Radio Club was well received. The latest printed circuit transistor set was passed around to illustrate modern construction techniques.

Phil 2TX is now experienced in the construction of 432 Mc. g.d.o's. Geoff 2XA is embroiled in t.v. servicing, but manages to get on 80 sideband with the HT37. Doug 2ASA is another of our ranks to have trouble with quads in gales. They're expendable, man, that's the way to look at it, well, repairable anyway.

Commercial transceivers are very popular on the Central Coast. I believe Swan-type signals now emanate from 2NI and 2IN (no misprint). Haven't heard the latter's signal, myself. Ernie 2EH still enjoys a c.w. contact and has a regular sked with Mona 2AXS. Alex 2AAK and Mona had an interesting trip to Melbourne and Warrnambool recently, operating s.s.b. mobile on the journey. Arthur 2MJ at Ettalong uses a home-brew s.s.b. tx and is often heard on 20.

Reg 2AI is always coming or going. I'm not sure if it's to VK3, 2 or 4 this week. He is now qualified to write a book "Travel in Australia". Lord Howe Island is on his list soon, a holiday is planned, and it may be that the pine tree which formerly held Graham's antenna will get further exercise. Heard Major 2RU on 7 meg. mobile recently. The signal was good clear sideband, so the bugs must have departed. Major was stunned to hear his cobbers 2ZX and 2BZ operating Swans on 80 the other night.

Wally 2AXH now has an antenna again (bamboos blew down), but the tx is still being re-built to eliminate Indians. Norm 2ALJ and I visit him from time to time. Frank 2AFJ is now instructing his son in radio and with a number of retired b.c. sets I think he will be able to make an all-band tx. Ken 2AFH and George 2ADZ span the ether regularly on 80. Your scribe is still madly making guy wires for a crank-up tower. Will the mast be ready before the quad elements wear out from exposure, that is the question! 73, 2ON.

VICTORIA

WESTERN ZONE

The Western Zone has gained two new members, Perce 3PA, who comes from Preston, and now resides in Horsham, and Alex Proudfoot, who is to be congratulated for obtaining his full licence at the last examination. Herb 3NN and Gary were two members of the Western Zone who went to the South Australian V.h.f. Convention at Mount Gambier, and two others, Harry 3ZX and Mac 3AZM attended the S.s.b. Convention at Hamilton.

The Western Zone also has many short wave listeners, listening in to the Wednesday night hook-ups. One, John Tilbrook, informs me that signals are all heard well up at Lacelles.

On the DX side, Harry 3ZX has worked quite a bit on 20 and 40 metres s.s.b. Herb 3NN has worked 5AB on 432 megs. Merve 3AFO has purchased a 40 ft. tower and intends mounting a 20 metre quad for working on this band. On June 21, the Western Zone held a satisfactory W.I.C.E.N. exercise. 73, 3ATS.

MOORABBIN AND DISTRICT RADIO CLUB

Although there has been a lack of news recently, there has not been any lack of club activity. Quite the contrary, as the clubrooms have had standing room only (almost) at recent meetings. One new member brings membership to 75 financial types, plus several unfinancial types who could be assured of the best seats and no questions if they remitted the overdues now. Besides, they have missed several excellent talks on such things as transistors, test equipment, etc., and very enjoyable "White Elephant" nights in the past few months.

Amongst the many coming events on our itinerary are a visit to fellow club member Bruce 3BM at Quambatook in October, the 80 metre tx hunt on 7th August (yes, Walter, I'll have the gear ready—famous last words, he says?) and a theatre night to "Camelot" in September.

Each year we take a big part in the Jamboree-on-the-Air and this October most of the active members are already committed with Scouts and Girl Guides (flowers on the receiver?. They're another year older, remember!). The troop that came to my shack last year have continued with paper QSOs with Claude 4UX and his XYL and a ZL since, so I think that this day adds a lot to the exchange of Scouting ideas.

Quite a number of club members are moving to 5PS' nightmare—s.s.b. Many teething troubles are being discussed at club meetings and many cures (?) suggested, so perhaps the club 80 mx net on Monday nights will go s.s.b.?? Listen to next Monday's net and hear (and enter) the next exciting episode in this ducky drama!

Now a call to all club members. Let's rally to the VK3 effort in R.D. Contest this year. If all active members spare at least a few hours AND send in their log we would make a big lift in this State's tally. Also we would be helping the Contest intention along. See you amongst the confusion in August?—Kevin 3ARD.

— • • • —

QUEENSLAND

DIVISIONAL COUNCIL MEETINGS

A special meeting was held on 17th May to receive an interim report on this year's Federal Convention. Peter 4PJ gave the report. Peter feels that having made the acquaintance of the Federal Executive and Divisional Councillors, administration of this Division will be much smoother, Federal wise. He would like to confirm the opinion of our previous Federal Councillor (Al 4LT), "that we are indeed fortunate in having men of the calibre of Federal Executive handling our affairs—which I can assure members is in good hands." Incidentally, this Division will be host State for the next Federal Convention.

The monthly Council meeting was held on 4th June. Ron, our outwards QSL officer, reported that he has at last coped with the large backlag of cards. Membership is increasing at a steady rate and we hope that this trend continues. The R.D. Contest trophy which was won by VK4 last year has now arrived in the State. Council hopes to be able

to arrange for display of the trophy in all of the large towns in the State. Although other States will make efforts to take the trophy from us, we feel confident that it is here to stay for a while at least!

Council asks all VK4 Hams to remember Friday, 14th August. A Divisional Dinner will be held at 8 p.m. in the Oak Room, Maple Lounge, Edward Street, City, on this date. It is during show week and the cost is only 25/- per member, so we'll see you there?

JUNE MONTHLY MEETING

The June meeting was held on 19th at the usual address, State Service Union Rooms, Elizabeth Street, City. General business was very promptly disposed of in anticipation of a fine lecture. A lecture titled, "Electronics in Medicine" was given by N. H. Gabriel, B.Sc., M.B.D.S., D.P.H., A.R.A.C.I. The success of the lecture could be gauged by the fact that question time took up nearly as much time as the lecture! Your scribe did note that questions were answered free of charge, which is not the usual thing for the medical profession.

General News: Jamboree-of-the-Air will be along soon and the organiser for Scouts in Australia is Mr. Noel Lynch—one of our members. The Ipswich and District Radio Club have been having well attended meetings in the last month. They have several new members which are a direct result of the efforts of the club at the Ipswich Show. The club exhibit, which included a fully operational low-band rig, aroused considerable interest. Classes for juniors have been started and are well under way. The annual meeting, apart from the regular fortnightly meetings, was held on 9th June. In particular, the ladies committee is to be congratulated on the excellent supper that was provided by them. Norm, from Ipswich, was trying to work 10 metre DX into Brisbane recently, but how successfully we do not know.

Ken 4OF and Peter 4PJ have been busy getting No. 19 sets ready for emergency and mobile use. W.I.C.E.N. is in its infancy here at the moment, but it should be well on the way shortly with the appointment of a State Co-ordinator. Hal 4HB will be in England by the time you read this. He and his XYL planned to go via Hong Kong and Europe, returning via the States.

Long awaited membership certificates of the W.I.A. have arrived and one will be forwarded to each member as soon as possible. Jeff 4XP is back on slow morse on 3504 kc. Claude 4UX stayed longer in Brisbane than expected. Only tonight I heard George 4GG being mentioned on 144 Mc. They were telling how in the days gone by, George used to transmit on the broadcast band. It is no wonder since George has been on the bands 34 years and recently turned 70. He is still quite active and from what I hear he doesn't even own a modulator.

The VK4 Division did receive a letter from Don 9DR thanking them for their efforts in helping the radio club on Christmas Island. The VK2 A.O.C.P. courses were very acceptable so he says. Don is quite active over the week-end in daylight hours. Frank 4FN, mayor of Gracemere, was mobile in Brisbane and was constantly looking for contacts. Well I shall close the news from this Division with a plea to all districts of Queensland. How about some news from your district for the 4WI Sunday morning news broadcast? Others want to hear of doings in your district. 73, Bill 4ZBD.

TOWNSVILLE AND DISTRICT

Although the drought broke in North Queensland, sorry to say the news reports on Amateur activity are still very scarce. In a recent round table talk with some of the northern chaps, the absence of the VK5 notes was very heatedly debated. Various inuendos were made that the blue pencil was the cause, but knowing that "Pansy" dearly loved having a shot at the Editor, in the various noted printed, I could not agree with them. Naturally, at times, I have had the blue pencil on mine, but always knew that he couldn't leave the paper open to some of my caustic remarks.

Claude 4UX really snowed under, correcting the various exam. papers for the youth clubs, and has Basil 4ZM finally roped in for the future to help out in correcting the elementary papers. Wasn't I lucky in being deaf when all this was being discussed. Bert 4LB very busy painting the new canes for the new quad he hopes to put up with the able assistance of Merv. 4ZMD. Yours truly will be there to offer advice and partake of the promised refreshments.

Very sorry to read in the latest official call sign list that the Townsville Amateur Radio Club has discontinued the call sign 4TC. What a shame it had to be, surely some of the boys were willing to help collect the necessary to keep the call sign intact? Hardly in keeping with the number of Amateurs that hold tickets in the second city of Queensland. Just imagine the Rocky boys when they spot the deletion, theirs being the fourth city.

Quite a number of the southern boys are in the north to partake of the tourist weather at this time of the year. Unfortunately not being on the main highway now, unable to meet them unless they detour. But as Basil said, "They all head for Cairns."

According to a headline in a recent Sunday paper, quite a long discourse was given in relation to t.v.i. in the Rockhampton area, caused mainly by two-way radio in the various business undertakings. This would gladden the heart of the local Amateurs as they were being wrongly blamed. The article went on to quote the local t.v. station manager that interference could be expected to some extent where there were channels between 0 and 3. The solution being to adopt the American system—no t.v. channels below 100 Mc. 73, Bob 4RW.

— · · · —

SOUTH AUSTRALIA

The monthly general meeting of the VK5 Division was held in the clubrooms to the usual representative gathering of members (for the benefit of the doubting Thomas' in the other Divisions, about 100 members, and a genuine 100 too!), and took the form of a buy and sell night, although it now goes by the somewhat pansied-up name of Jumble Sale, apparently to avoid the disgrace of any member of Council finishing up in the arms of the local constablurary, no constabblu—, no constabll—, oh well, to avoid being pinched (Heaven forbid!), and a good time was had by all. The master of ceremonies was Brian 5CA, occasionally assisted by our worthy President (Phil 5NN), who showed a somewhat unsuspected talent for wheedling the last shekel from out of the unsuspecting members present. He even talked me into buying an electric motor with the suggestion that it might step up the old revs. a little bit. Too late, brother! The spirit is willing, but the flesh is weak!

Anyway, it was quite an entertaining night for all and although I could go on padding

BRIGHT STAR CRYSTALS

FOR ACCURACY, STABILITY, ACTIVITY AND OUTPUT

Our Crystals cover all types and frequencies in common use and include overtone, plated and vacuum mounted. Holders include the following: DC11, FT243, HC-6U, CRA, B7G, Octal, HC-18U.

THE FOLLOWING FISHING-BOAT FREQUENCIES ARE AVAILABLE IN FT243 HOLDERS:—
6280, 4095, 4535, 2760, 2524 Kc.

5.500 Kc. T.V. Sweep Generator Crystals, £3/12/6.
100 Kc. and 1000 Kc. Frequency Standard, £8/10/0 plus 12½% Sales Tax.

Immediate delivery on all above types.

AUDIO AND ULTRASONIC CRYSTALS—Prices on application.
455 Kc. Filter Crystals, vacuum mounted, £6/10/0 each plus 12½% Sales Tax.

ALSO AMATEUR TYPE CRYSTALS—3.5 AND 7 Mc. BAND.

Commercial—0.02% £3/12/6, 0.01% £3/15/6. plus 12½% Sales Tax.
Amateur—from £3 each, plus 12½% Sales Tax.
Regrinds £1/10/-.

CRYSTALS FOR TAXI AND BUSH FIRE SETS ALSO AVAILABLE.

We would be happy to advise and quote you.

New Zealand Representatives: Messrs. Carrel & Carrel, Box 2102, Auckland.
Contractors to Federal and State Government Departments.

BRIGHT STAR RADIO

46 Eastgate Street, Oakleigh, S.E.12, Vic. Phone: 57-6387

With the co-operation of our overseas associates our crystal manufacturing methods are the latest.

SILICON DIODES

Guaranteed, Tax Paid, Post Free.

Absolute Maximum Ratings:

P.I.V.		I_D		Price
50V.	-	0.75A.	-	2/3
200V.	-	0.75A.	-	4/-
400V.	-	0.75A.	-	6/10
600V.	-	0.75A.	-	11/4
50V.	-	2A.	-	6/-
50V.	-	3A.*	-	5/8
100V.	-	3A.*	-	7/-
400V.	-	3A.*	-	14/8
600V.	-	3A.*	-	21/6
50V.	-	12A.*	-	21/6
200V.†	-	12A.*	-	30/1
200V.†	-	35A.*	-	50/-

Germanium Diodes, 3/- each 25/- for ten, £10 per hundred
(similar to OA90)

Delivery: One to three weeks.

Discount for orders of 10 or more.

* With heat sink.
† Ideal for transistorised ignitions. See "R.T. & H." articles, March-June, 1964.

Electronics-Associates
Department "S"
76 VIEW ST., HOBART, TASMANIA

the details for another couple of pages, perhaps I had better pull my head in, because after all the venerable Ed., you know, the one with the golden spectacles, still has me on probation, and I would not like him to think that I am nothing but a padder!!

Very little business was transacted, and the little that was discussed was purely of a local character, so let us pull down the curtain on the details of the meeting, wake up the sleeping members, and send them all home to their couches of virtue, and let them await with eager anticipation for the next meeting.

Could not help but notice the number of older members present at the meeting, by older I mean those who in the past have pulled their weight on Council or in other fields of activity for the Division. Two ex-Presidents in Lloyd 5OK and John 5KX, as an example (a somewhat dubious example, but still an example!) and also Wally 5DF who was down from Leigh Creek on vacation and fluked a general meeting for once. It is good to see this type of older member at the meetings, including me, because far too many ex-officers of the Division drop out of office holding and disappear into the never-never, and very little is ever heard of them again. What's that? It might not be a bad idea if I disappeared into the never-never. Oh is that so. Cut out the flattery, it will get you nowhere!

Was driving along Grote Street the other day and had to jam on the brakes to avoid running down an athletic young man who was dodging out and in of the traffic like a six-day bicycle rider. Yes you have it. None other than Johnny 5KO, looking younger than ever. How do you do it, Johnny? Eating peanuts? Oh dear, there's that twitch again, and I am nowhere near a Morse key!!

Another ex-official at the meeting was Keith 5KH, my favourite banker, you know, the one who always leaves the vault open whenever I call on him, although I must admit the compliment is somewhat dimmed by the sight of the 303 on his desk, pointing right at my fallen chest too! Judging by the gear he bought at the meeting he is still interested in the game.

Listened into the usual sked of Frank 5MZ and Carl 5SS on 7 Mc. the other night and discovered a newcomer in contact with them in Moss 5TU. Taking the general hilarity of Frank and Carl as a general guide, I formed the conclusion that Moss had constructed some form of a Frankenstein Monster which was gradually destroying his usual good temper. He called the monster a Z Match, and if his attitude and cheerful outlook to his troubles was any indication of his keen approach to Amateur Radio he should go a long way in the hobby. Nice to hear you Moss.

Dave 5DS, my favourite Scotchman, joined in the QSO later on and his keen ears picked up some callers in the background trying to break in and they turned out to be Ray 6WU and Jeff 2QC. When I backed out for my evening meal, the QSO was going on in full strength, and for all I know could still be in progress.

Never one to be sidetracked by coarseness, abuse, or even veiled sarcasm, it is with pleasure that I am now able to announce to my army of enquirers—oh well, if you insist—to Les 5NJ, that the frequency meter is to be placed in the custody of Garry 5ZK as part of 5WI, and will be available for frequency checks upon application. Well, there you are Les, I always get my man.

Whilst the VK5 notes in the magazine have been in recess, most of my under-cover agents have gone into smoke and are taking some getting back on the job. Uncle Tom 5TL, who usually wrote to me from his shack on the Murray River, around Renmark, is one in particular, and after detailing my agent number 14895737872293458 to the job of finding him, I was reliably informed that Tom has migrated back to the "Big Smoke" and is hiding up at the Glenelg Post Office. His QTH is given as Glandore, and although my above-mentioned agent tells me that this could be the Glandore Industrial Home, I feel that this is only a rumour, or malicious gossip. Tom—take a little less tea drinking one day and tell me the awful news—please.

You all know the old saying, "If a dog bites a man, this is not news, but if a man bites a dog, then it is hot news". Well, news has reached me that none other than Tubby 5NO is nibbling at s.s.b. Shocked to the core, and extremely mindful of his pointed remarks at times concerning the "holier than thou brethren," I immediately took steps to investigate the allegation. When I tackled him at the meeting he seemed a little shifty about it all but finally made a statement to the fact that he had seen an s.s.b. rig and receiver around the shack, but was not impressed with s.s.b. Although he sounded quite sincere about it all, I cannot quite get the fact out of my mind that he seemed anxious to bring the conversation to an end as quick as possible, and upon the arrival of his son and heir, Jeff 5ZP, laden down with a parcel of QSL cards, they both backed away and almost ran out of the building. I wonder—I wonder!

Talking of s.s.b., and who wants to talk of s.s.b. Arthur 5HY sat next to me at the meeting and definitely brainwashed me on the subject of s.s.b. So much so, that I now have the address of a VK2 who supplies transceivers and am also half committed to a visit of inspection of the shack of a well known s.s.b. enthusiast in the Prospect area. No wonder they used to say in the early days of radio in VK5 that Arthur could sell icechests in the north pole, he was that good as a salesman, I quite believe it. I tried to keep our voices down during the thesis on s.s.b., but someone is bound to have heard some of it, and if so the cards are being stacked against me. Oh dear me, oh dear me.

One of the first things that I did after resuming as VK5 scribe for the magazine was to tune into 7 Mc. around 5.30 p.m. to the regular sked of Jack 5LN and Athol 5LQ, quite sure that their conversation would give me the usual source of several paragraphs. I hunted there, I hunted here, in fact I hunted everywhere, but not a sign could I find of them. Somewhat puzzled, I investigated the matter and was amazed to find out that they had migrated to 3.5 Mc. Whilst they strongly denied the move was made to prevent me from reading their mail, the smug look on both of their faces when tackled makes me decidedly suspicious. What frequency did you say you were on? Oh you didn't—OK—I can take a hint.

Jim 5JK fully restored to health these days, although if rumour is to be believed, he had the electrical installation in his QTH fiddled up and ever since he has been bothered with some b.c.i. right in his own kitchen and elsewhere in the house. My suggestion that he have the installation unfiddled, brought the response that it probably deserved it. Well, I was only trying to help!

John 5KX reported as being seen on a mobileering tour of Kangaroo Island, and to confirm my oft-repeated statement that no matter where one goes, one can always bump into a fellow Ham, John bumped into Gil.—sorry—Gilbert 5GX on the island. Rumour further has it that Gilbert was well and truly whooping it up on the island, as a matter of fact I believe he was even seen walking down the main street at Kingscote brazenly eating a double ice cream cone. Gilbert—watch yourself, OM!

Back before the "Great Misunderstanding," I mentioned in the magazine that a visitor at one of the VK5 Divisional meetings was announced as George Glover, and how I immediately ducked for cover, thinking that the George Glover 3AG, one of the wise men from the East, was over on vengeance bent. It is with regret that I announce the death of the VK5 George Glover (ex-G3FMQ), who was accidentally killed in a motor accident one night recently after work. Although intending to become a VK5 he never quite got round to it, but has been heard frequently from the QTH of Arthur 5HY, with whom he had become firm friends. The Division regrets the sad news and extends to his relatives their sincere sympathy in their bereavement.

The well known lunch-time session on 7 Mc. seems to be breaking up. I have listened at various times on the band but nary a thing have I heard. Pete 5FM is reported as being on s.s.b., although I have not heard him as yet. Tom 5TL, as reported elsewhere, has left Renmark, poor old Luke 5LL has passed on, which somewhat depletes the members of the session. A pity in a way if the session has broken up, it was a good meeting place and it was remarkable just who bobbed up now and again on the session. Let's hope I am wrong in my assumption that the session is fading.

An old chestnut turned up at the meeting. I was asked by one of the new members why the weekly notes in the local "Advertiser" never seemed to mention many of the local boys or their contacts. In view of the fact that other members might be thinking along the same lines, I hasten to assure them that if any local Amateur ever does something that can be classed as news from the viewpoint of the general public, I would not be able to print it quick enough, but unfortunately Mr. and Mrs. General Public is not one bit interested in knowing that Joe Blow 5XYZ had a contact over the back fence or something along those lines. The column in the "Advertiser" is meant to be the front window of Amateur Radio as a whole, in an endeavour to give it an image and a build up, which sometimes it grieves me to say, some of the gang do not live up to, and it is only by printing the doings of the great, and near great, that the image can be sustained. With this in view, the more Kings, Princes, possible Presidents, etc., etc., that I can put in the column, the more I will succeed in convincing the general public that the average Radio Amateur is not a be-spectacled moron who spends most of his time up in the attic talking to the bats and the mysterious persons who seem to inhabit their immediate portion of the earth. Can you honestly see anything against this policy? Heaven only knows we need such publicity these days. Oh, I almost forgot, this is the policy of Council and not mine alone, and you all know how obedient I am to the wishes of that August Body!

Talking of the "Advertiser" notes reminds me that one of my paragraphs each week has to do with s.w.l. news. In view of this fact several of the boys have asked me at times what has become of that ace s.w.l'er Jim Paris these days? Well Jim is in the pink and happily married and is still keen on the game. He is of course the official B.B.C. observer for VK5, if not for VK, and always manages to keep me supplied with news for the above-mentioned paragraph.

I notice in the last copy of "Info," the official magazine of the Elizabeth Amateur Radio Club, that Tubby 5NO has retired from the position of President, and his position has been taken by Colin 5ZHJ. Tubby has done a good job during his long presidency and it is unfortunate that pressure of business caused his retirement. Congratulations to Colin and the best of luck in the job. Tubby, although officially withdrawn from the position of Editor of "Info," has agreed to contribute his services as technical advisor. Nice work.

The re-shuffle mentioned above also means that Hugo 5IB has taken over the position of QSL officer to the club from Colin 5ZHJ and Jeff 5ZP. I notice that the old stalwart, Ron 5FY, is still the awards manager. It looks like they will have to shoot him to get rid of him. Jokes aside, Ron has done a terrific job for the club and has my admiration for such long service. Incidentally, Colin's elevation to President left a vacancy on the committee which has been ably filled by Don 5TM who is reported as still feeling the effects of the arm twisting!

Vern 5VB, better known in these notes as the "Admiral" (ex 5ZAH), has been disporting himself with his new call and the opportunity of working on the square bands. Congratulations Vern, it was worth waiting for, was it not?

Talking of the "Admiral" reminds me that I have just received a card from Brian 5BI for our contact at Oakbank. Thanks OM, but did you have to put "At Last!" on the front of it, to say nothing of the pansy on the back in full bloom? People will think I am never on the air!

Leith 5LG noticed at the meeting sitting quietly and sedately a few rows from me. I never thought the day would come when I would type the words quiet and sedate as applying to him. However, when asked how he was feeling, he gave quite an Academy Award act of a brass monkey, so apparently that was the reason. Me too, brother.

That athletic and photogenic gentleman sitting at the main table industriously writing every now and then at the meeting was, I presume, none other than our new minute secretary, Murray 5ZQ. I say presume, because although I know him by sight and have spoken once or twice, the name or the call did not ring a bell when I read of the appointment in the journal. Anyway, nice work Murray, and if I am wrong in my presumption, it at least made a paragraph. Put that red pencil down at once, you cad, Sir Ed!

Although John 5KX is getting his fair share of publicity in this month's notes, I cannot keep the fact secret for next month of the fact that he is off on a world jaunt some time next year, strictly business of course. My suggestion that he would probably want someone to carry his bags received the usual coarse reply and only goes to show that in their conversations with me, these ex-Presidents manage to shed their veneer and come down to my level!

Called in to see Clem 5GL the other day with a crystal query and whilst there, Doug 5DW came out of the back room and had his usual insulting conversation at my expense. As a matter of fact, he is an ex-VK3, but I don't hold that against him. After all, they can't all be like Pincott. Clem lifted my ego somewhat with the remark that his XYL was wanting to know when I was going to write for the magazine again. Ho hum, my fatal beauty again!

Another one to walk into the shop was that staunch supporter of s.s.b., none other than Doug 2DQ, who informed me that he had just flown down from Broken Hill. I looked long and hard for his wings, but he was so sartorially perfect, that the wings, if he has any, were covered up too well. Good to see you Doug, even if you do spend a deal of your time on the air insulting me and my old-fashioned mode of telephony. Gercha!

Noticed a pair of rascals from Port Pirie at the meeting. Yes, you guessed it, Bruce 5MC and John 5ZC. I asked John how he liked Pirie and he was enthusiastic on the subject. Nice work, OM. Good to see you again.

Also noticed Joe 5JO at the meeting looking fit and well. Have heard him at times on 7 Mc., and without doubt he still retains his enthusiasm for our grand old hobby. Keep up the good work, Joe.

Just as I was about to put these notes to bed, I received a command from Council to warn all members of the present trend in the fashion world. They asked me to word the warning myself, and whilst I must admit my ignorance of present trends in fashions, I will do the best I can.

Members of the VK5 Division are warned to ignore present dress fashions, especially the new bottomless evening trousers. Members are also warned that should anyone brazenly attempt to wear such bottomless trousers to any of the meetings, Council will be forced to take a stern view. [This would no doubt lead to a real bust up if the full outfit "new style" was worn.—Ed.]

Oh well. They can't say I did not try to do my best. 73, de 5PS—PanSy to you.

— • • • —

WESTERN AUSTRALIA

This month we find not very much news having come forward, so we will have to use that which we have and fill in the rest from observations.

The general meeting was held on 16th June and the attendance was lower than usual, but when the weather conditions are looked at, we can realise why. It was raining very heavy with very strong winds blowing. It was very pleasing to see Cyril 6CN down at the meeting and he seemed to enjoy talking to the various members afterward while enjoying a cup of tea and biscuits. Just in case you were not aware of it, we hold our meetings every third Tuesday and we do have tea and biscuits at all meetings, so what about coming along to swell the numbers and let your Council know what you are thinking.

We do have some very interesting points brought out before us in the line of social jottings. It was quite interesting to note the paper being used for letter writing by one member—"scented with flowers in the corner."

Clem 6CW has his tower and beams up and we do hear him around a little now. Jim 6RU has removed his tower and beams in preparation for moving to his new QTH. He is at present using a ground plane on 20 and reports that the only noticeable difference is on reception and not on transmission.

Another item which is of interest is that Channel 2 from Adelaide has been received in Albany and I believe that Channel 0 has been trying to give some viewers variety in the West.

The W.I.C.E.N. net is growing with more of the f.m. two-ways being commissioned and I believe that the list around the metropolitan area includes 6ZEZ, 6ZEE, 6ZEA, 6ZBD, 6ZDW, 6MM and possibly quite a few more which are not to hand.

We are told that we should publicise the Amateur Service, however sometimes it pays to think as to how far the publicity goes. Some of the more energetic types made a trip down to the Albany districts to visit a place called Bluff Knoll. After having struggled to the top of this knoll, some 1½ miles nearly straight up (so we are told) the party arrived at the top. What should happen but another party consisting of several of the female type were already up at the top and when they spied the Amateur party nearly all of the females exclaimed "Tom!" (6DP).

One should think about who keeps the Division's finances because when they use locks they should remember such things as keys, shouldn't they? Barry 6ZCF happened to wear Alyn's overcoat from his car to the meeting room at the last meeting and the obvious happened, he left his car keys in Alyn's pocket, and Alyn went home before Barry. Just as well that someone else with a car had not gone home and was able to act as a taxi.

Now if you have not got your gear working by this time, you had better arrange to use someone else's for the R.D. Contest as it is only a fortnight away.

Must sign off now chaps, but remember I would like more news to write about, so till next month, 73, Roy 6RY.

— • • • —

TASMANIA

Here it is at last, R.D. month. The week-end of 15th and 16th August. Remember the opening ceremony will be broadcast from 7WI at 1745 hours on the 15th. Wholehearted participation and log submission is your Council's request. Don't leave it to the other chap. If we "have a go" I feel quite confident we can once again hold that trophy in VK7, so what about it, let's give the other Divisions a run for their money.

This 'flu we've been having here in Tassy appears to have struck with a vengeance at W.I.A. members. (I thought we'd be immune to most things.) The June v.h.f. meeting was attended by five members only (none of whom had keys to the clubrooms). Terry 7CT had to cancel his A.O.C.P. class one week, couldn't get out to the rig for the Sunday 7WI rebroadcast. Len 7LE, who was to lecture to the July general meeting on "Predictable Long Distance Radio Communication via the Satellite Ionisation Phenomena" (phew!), had to postpone same due to the wog. Just as well perhaps, quite a few others were away also, including yours truly. The substitute lecture consisted of tapes of the Hamilton (Vic.) S.s.b. Convention, which I am told were very interesting indeed, even though some of those present persisted in showing their ignorance by talking among themselves.

We have two other new Z calls in VK7 now besides Anne 7ZYL, whom I mentioned last month; they are Winston Nichols (7ZWN) and Greg Power (7ZGP). Both these lads are from the top end of the island and my spies tell me they are already making their presence felt on the air.

Our old friend, Crosby 7CW, has gone on a round-the-world trip (half his luck) and plans to be back in October. I expect we'll see a few choice pieces of overseas s.s.b. equipment when he returns.

Sid 7SJ will be Branch Manager for his firm (an Aust.-wide wholesaler), at Geelong, by the time this is published. Good luck Sid in your new position.

Ted 7EJ can now be understood (?) on s.s.b. since he limited his audio bandpass, and the other Ted 7EB, who owns an AR88, tells me it's not a bad receiver since he replaced a 33K screen resistor that had gone to 100K—he can even hear some of the stations that Ian 7ZZ works.

Charlie 7KS has a new whip on his mobile and has a really f.b. signal now on 80, while Ken 7LL has been occupying the ether again with good signals on both 80 and 2 metres. Keep it up, Ken, good to hear you on again.

Enough for now, **don't forget R.D. Contest and post your log.** 73, Geoff 7ZAS.

TRANSMITTING COMPONENTS

Stocks Famous American Components

See adverts. in "Amateur Radio," Feb./Jul. '64

JAMES BERRY & COMPANY

Melb. at 1.10 and 5.30, 343 Lit. Collins Street. Syd. 10 a.m.-3 p.m., Daking House, Rawson Pl.

Stockists of Radio and Electronic Components for the Amateur Constructor and Hobbyist

First Ring, Write or Call on

WILLIAM WILLIS & Co. Pty. Ltd.

428 Elizabeth St., Melb'ne. Ph. 34-6539

Repairs to Receivers, Transmitters; constructing and testing; xtal conv., any frequency; Q5-ers, R9-ers, and transistorised equipment.

ECCLESTON ELECTRONICS

146a Cotham Rd., Kew, Vic. Ph. 80-3777

HAMADS

Minimum 5/-, for thirty words. Extra words, 2d. each.

Advertisements under this heading will be accepted only from Amateurs and S.w.l's. The Publishers reserve the right to reject any advertising which, in their opinion, is of a commercial nature. **Copy** must be received at **P.O. Box 36, East Melbourne, C.2, Vic.,** by **8th of the month** and **remittance should accompany** the advertisement.

FOR LEASE: Up to two years. Brick and tile House, 2 bedrooms, lounge room, dining room, kitchen, laundry, accessory room, H.W. service, sewered, garage, recently renovated, on bus stop, near station. Owner has 75 ft. self-supporting tower at rear with TH4 and rotator for use of tenant. Ideal for active Amateur. Quiet residential area, opposite park, phone on. £10 per week. H. O. Matthews, VK2DD, 101 Woids Ave., Hurstville, N.S.W. Phone 54-4311.

FOR SALE: Complete Station. SX28 Receiver, 5.5 Mc. S.s.b. Generator, Franklin V.f.o., 1200 volt supply, stable v.f.o. supply, 813 linear. Will not break up. Any demonstration. £125. VK2FM, 27 Wattle Ave., Carramar, N.S.W.

FOR SALE: Glovebox Mobile 7 Mc. Transmitter and Converter, 8" x 5" x 3½", complete with genemotor, loaded whip, microphone. W2EWL S.s.b. Transmitter as per S.s.b. Handbook, no power supply. Type 3 Mk. II. complete coils, spare tubes, modulator, speaker, xtal mike, etc. Sundry other gear. VK3AHG, D. Gilder, 11 Gleeson Ave., Burwood, Vic. Phone 29-7609.

FOR SALE: Marconi CR100 Rx, two r.f., three i.f., prod. det., S meter, three-stage filter, a.n.l., £35 or near cash offer. VK3WW, 3 Maxwell St., Lalor, Melbourne.

FOR SALE: Panoramoscope BC1031A, £38. Hammarlund Super-Pro Receiver, £40. Command Receiver, BC-453B, Q5er, £7. B. & W. 850A 1kw. all-band Tuner, £9. 1-14 Mc. Phasing Transmitter with two 811s linear, vox, etc., £30. VK2ADC.

GELOSO Receiver Converter, Amateur bands, as new. Commercial cabinet. 455 kc. Panadaptor. Both with Handbook. 522 Tx (rack), regulated bias supply, QQE03/12 modulator, Command 3-6 Rx (rack), power supply and audio, etc. Want C.r.o. or Tape Recorder. Smith, 7 Howard St., Coffs Harbour, N.S.W.

SELL: Jelectro QRP60 Tx, 60w. input c.w. or phone, bandswitched 80, 40, 20, 15 and 10, inbuilt mod. for carrier control, 6CL6, 6DQ6A r.f., 12AX7, 12-AU7 audio, 5U4G rect., pi network output, coupling 50 to 1000 ohm, xtal socket or external v.f.o. input, large meter, p.a. grid or plate current. In attractive case, 12" x 6" x 6", 22 lbs. New, with circuit and xtal mike, £38. VK3ZAN, Phone 306-9380.

SELL: Murphy B40 Rx £40. R.f. deck Geloso, QB3/300, 150w. final, 12" x 19" panel, rack mount, £25. Heathkit "Cheyenne" Tx, 80-10, v.f.o. and xtal, 90w. a.m. c.w., excellent condition, £80. 52 Mc. r.f. deck, comd. v.f.o., p.p. 1625s, 150w. final, metered, t.v.i. suppressed, 10" x 19" panel, rack mount, has W.A.S., £25. W. J. Bell, VK3WK, Wangoom, Vic. Phone: Grasmere 225.

WARBURTON FRANKI

AFTER STOCKTAKING AND REMOVAL SALE

★ PICK-UP CARTRIDGES

RONETTE 284-0 V

Monaural, turn-over type, c/w. Sapphire Standard Stylus and Diamond L.P. Stylus.

39/6

+ 25% S.T. + Pack and Post 6d.

Locally made Macron turn-over Crystal Cartridges c/w. Sapphire L.P. and Std. Stylii.

15/11

+ 25% S.T. + Pack and Post 6d.

★ GOLDRING PICK-UP ARMS

Wired, with base and rest.

7/11

+ 25% Sales Tax

★ SILICON DIODES

Made in U.S.A. 400 p.i.v. at 1 amp.

70/- doz. + 25% S.T.

6/3 each + Tax

★ TRANSISTOR MICROPHONE MIXERS

Will mix inputs from four High Impedance Microphones. Metal case 6" x 2¾" x 2¼". 9 volt battery supplied.

72/-

+ 12½% S.T. + Pack and Post 1/6

★ TEST LEADS Imported

Fine Pins to suit Jap. Multimeters or Standard Pins suit others.

4/9 set

+ 12½% S.T. + Pack and Post 6d.

★ MICROPHONES

Crystal Type. Made in Italy by Geloso.

Type M1112—Swivel mount, stand adaptor, flex and plug supplied. Plastic case.

44/- + Sales Tax 12½% + Pack & Post 1/-

Type M1110—Swivel mount, quick release stand adaptor, on-off switch and flex supplied. Metal cased.

58/6 + Sales Tax 12½% + Pack & Post 1/-

★ OILERS, New Swiss made Precision Type LUBRISTYL

● Clips in pocket like fountain pen. ● Always clean. ● Leakproof, draws back excess oil. ● Controlled application of oil to any point easily accomplished. Supplied c/w. instructions and two capsules of oil.

13/-

S.T. exempt. + Pack and Post 6d.

★ TRANSISTOR AMPLIFIERS

TWO WATTS OUTPUT

Encapsulated in epoxy resin. Works from 4½ to 12 volts supply. Output impedance 3 to 45 ohms. Supplied c/w. leaflet of instructions to build various pieces of equipment.

120/-

+ 25% S.T. + Pack and Post 1/3

★ KNOBS, English make

Three Spoke Wheel Design

1½" diameter with Indicator Dot. Standard ¼" bore. Brass insert with grub screw. Overall depth ¾". Colours: White or Maroon.

1/6 each

+ 25% Sales Tax. Post Free.

★ BATTERIES

MALLORY MANGANESE LONG LIFE CELLS

- Last up to 10 times longer than ordinary dry cells.
- 2 years' shelf life.
- Completely leak-proof.

Mallory No.	MN1300	= 950, D50	6/4 each + Pack and Post 1/- pr.
,, ,,	MN1400	= 935	5/1 each + Pack and Post 1/- pr.
,, ,,	MN1500	= 915, 1015	3/3 each + Pack and Post 6d. pr.
,, ,,	MN2400	= 912	2/10 each + Pack and Post 6d. pr.
,, ,,	MN9100	= 904	2/1 each + Pack and Post 6d. pr.

All above + 2½% Sales Tax.

Also available the **Mallory Mercury Battery** Type TR146 = 216, 9/2 each + 12½% Sales Tax.

● *PLEASE NOTE OUR NEW ADDRESS*

WARBURTON FRANKI

220 PARK ST. SOUTH MELB., VIC. PHONE 30 lines **69-0151**

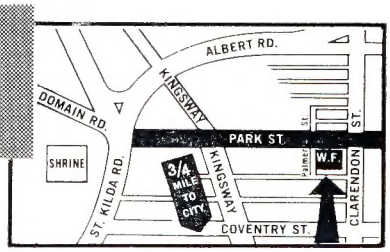

● *Please include postage or freight with all orders*

● TRADE ALSO SUPPLIED

RUGGED

PULSE AMPLIFIER TETRODES

★ **EXCELLENT PULSE SHAPE.** High and constant peak emission throughout the duration of the pulse is the first requirement of a good pulse tube. The C1149/1 and the C1150/1 cathodes are carefully made and fully activated for constant emission—there is negligible plate current slump during the pulse and flat top is maintained.

★ **FREEDOM FROM SPARKING.** Sparking is an accepted hazard in high voltage tubes and is often a major cause of failure. EEV C1149/1 and C1150/1 cathodes are designed and seasoned so that sparking is virtually eliminated—if a spark does occur the EEV cathode can "take it on the chin"—it does not flake.

★ **RUGGEDNESS.** The extremes of vibration and shock experienced in ships and aircraft call for tubes of extremely robust design. No other previous specification calls for the stringent dynamic mechanical tests met by these EEV tubes.

★ **HEAT DISSIPATION.** The factor of unwanted generated heat creates many problems for equipment designers. Bulb shapes of the C1149/1 and the C1150/1 are such as to give low surface temperatures and the generous plate size and design of the integral plate terminal ensure good heat dissipation.

★ **EMISSION FROM CONTROL ELECTRODES.** This has been eliminated by the use of heavily gold-plated grids and processing methods evolved from years of experience in the power tube field.

C1149/1 C1150/1

AMERICAN ELECTRICAL EQUIVALENTS

4PR60B AND 715C

ENGLISH ELECTRIC

GENERAL DATA			
Electrical	C1149/1	C1150/1	
Heater Voltage	26	26	V
Heater Current	2.15	2.15	A
Cathode Heating Time (Min.)	3.0	3.0	minutes
Mechanical			
Overall Length (max.)	6.00	6.00	inches
Overall Diameter (max.)	3.062	2.598	inches
Base	B4A	B4A	
Mounting position	Any	Any	

TYPICAL OPERATING CONDITIONS			
	C1149/1	C1150/1	
Duty Cycle	0.001	0.001	
Pulse Length	2.0	2.0	u sec
Anode Voltage	20	15	kV
Screen Voltage	1.25	1.25	kV
Grid Voltage	—600	—600	V
Pulse Positive Grid Voltage	150	100	V
Pulse Anode Current	18	15	A
Pulse Screen Current Approx.	1.7	2.0	A
Pulse Grid Current Approx.	0.3	0.2	A
Pulse Input Power	360	225	kW
Pulse Output Power	330	205	kW

AWV

THE AMALGAMATED WIRELESS VALVE CO. PTY. LTD.

SYDNEY • MELBOURNE • ADELAIDE • BRISBANE

DISTRIBUTORS FOR ENGLISH ELECTRIC VALVE COMPANY LTD.

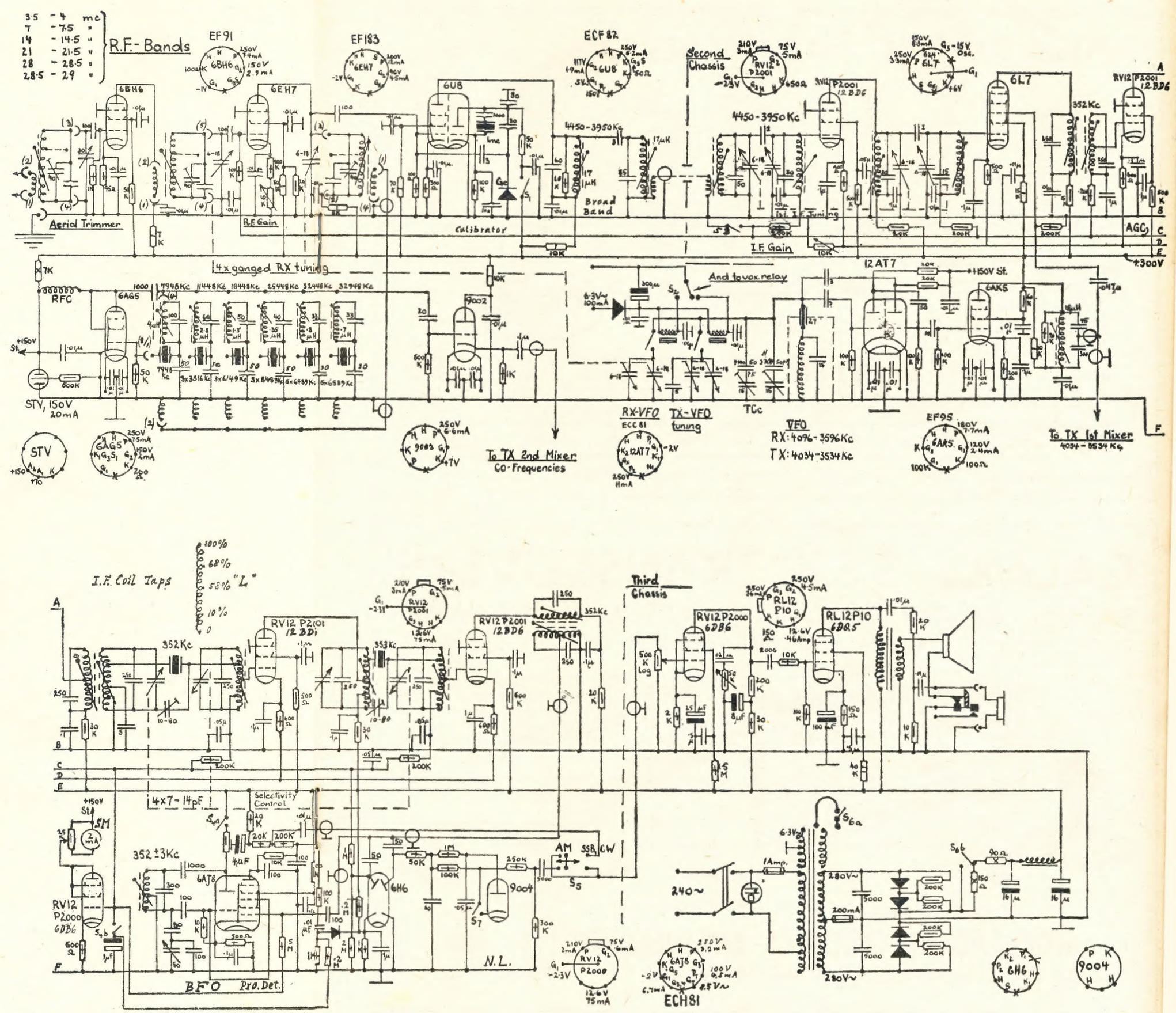

Amateur Radio, August, 1964